# BIOMA CONDENSING UNITS

## AN EMBRACO INNOVATIVE SOLUTION FOR COMMERCIAL REFRIGERATION

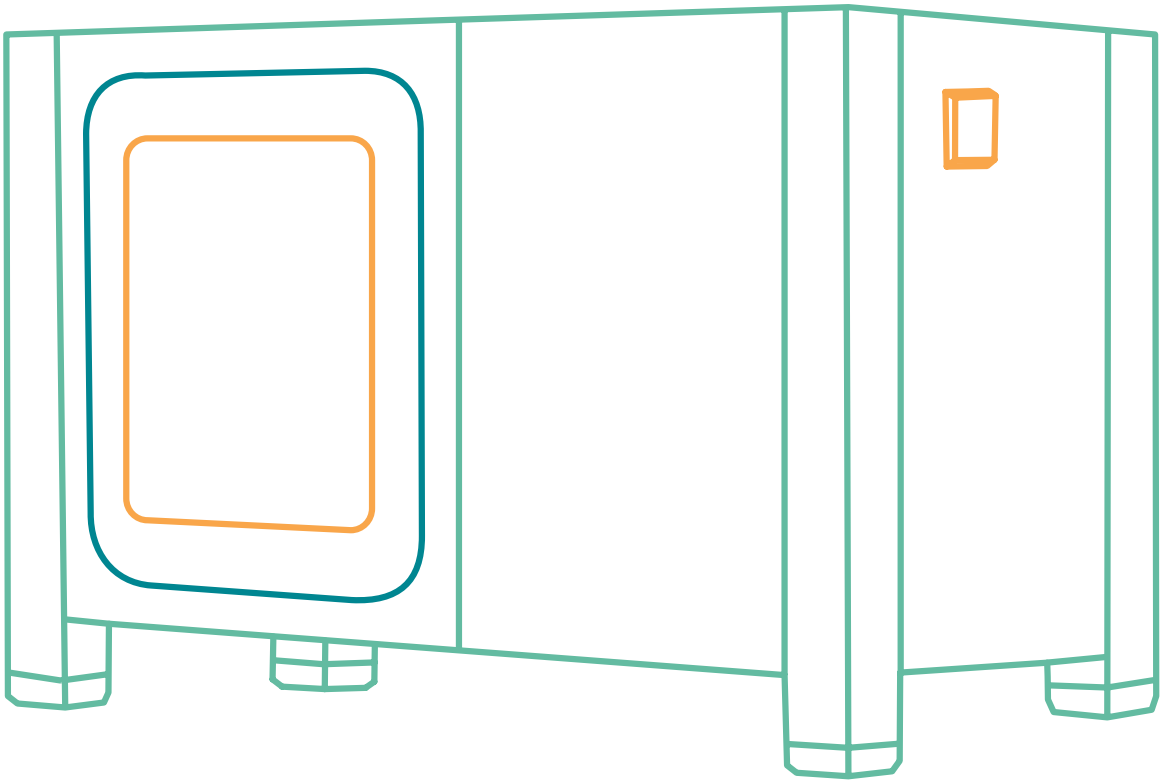

Multi-Refrigerant Platform

- R404A
- R452A
- R449A
- R134a
- R513A

embraco
Cooling Solutions

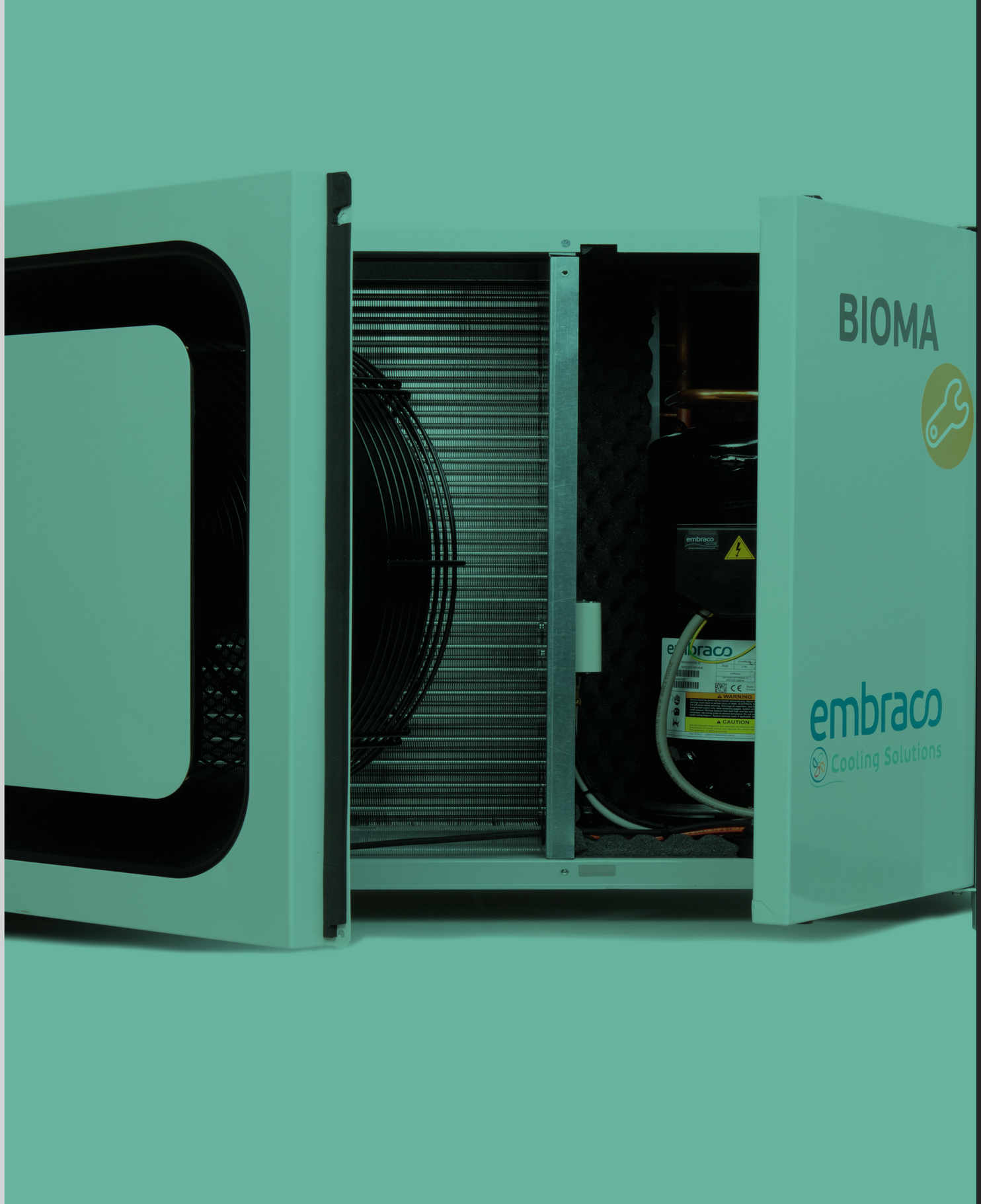


01 BIOMA PRODUCT FEATURES

02 BIOMA PRODUCTS INFO

03 GENERAL DATA & PERFORMANCE

04 DIGITAL TOOLS

## HIGH EFFICIENCY RANGE: FROM 0.5 Kw TO 10 Kw

0.5 Kw **LBP R404A - R449A - R452A** *4 Kw*

0.7 Kw **MBP R134a - R513A** *6 Kw*

0.7 Kw **MBP R404A - R449A - R452A** *10 Kw*



# BIOMA RANGE MAIN FEATURES

### PERFORMANCE AND OPTMIZED SOUND LEVEL

- Robust design to absorb vibration and noise
- Sound level as low as 28 dB (A)
- Acoustic jacket on scroll compressors
- Fan speed controller as standard
- 5 Faces insulated with acoustic foam

### ACCESSIBILITY

- 3 door access on hinges – ¼ turn door lock to open
- Direct access to components you can set or change
- Direct access to fan and condenser

### INNOVATIVE DESIGN

- Hidden fan - Stylish design for a new experience
- Unique airflow management
- Mini channel condenser – 40% less refrigerant charge

### COMPACTNESS

- Optimized dimensions to reduce surface area (<0.6m²)
- 1 fan design for all housing sizes
- Stackability: Unique offer to stack units from different dimensions

### FLEXIBILITY

- Multi-Refrigerant platform: R404A, R449A, R452A, R134a, R513A
- Fully equipped electrical box
- Condenser treatment against corrosive environment
- Available with the complete range of Embraco hermetic and scroll compressors

embraco Cooling Solutions

## THREE SIZES: A COMPLETE RANGE

| HOUSING | DIMENSIONS (mm) | |
|---|---|---|
| 1 | 982 x 484 x 600 | |
| 2 | 1082 x 490 x 708 | |
| 3 | 1277 x 538 x 1005 | |

## NOMENCLATURE

### MODEL DESCRIPTION

**UP- NT 2 180 GK E A E 00**

**BIOMA SILENT UNITS**

**COMPRESSOR FAMILIES**

**NEU NT NJ NTU NJX**
**SE =** Scroll Embraco

**APPLICATION CODE**

**2 =** LBP **6 =** MBP

**NOMINAL CAPACITY**

The first digit is the number of " zeros that must be added to the last two digits to obtain the cooling capacity (approx) in kcal/h at 50 Hz.
E.g.:214 -->1400 kcal/h at 50Hz.
**Scroll:** In BTU/h at 60 Hz x 1000 - ARI Conditions

**REFRIGERANT**

**GK** = R404A, R452A, R449A 1~
**GS** = RR404A, R452A, R449A 3~
**Z** = R134a, R513A 1~
**ZX** = R134a, R513A 3~

**PRODUCTION PLANT**

**E -** Europe

**COOLING SYSTEM**

**A -** Air cooled

**AMBIENT T°**

**E -** Europe +43°C

**CONFIGURATION**

**00 -** LL+Ebox+FSC

embraco





## REFRIGERANTS MAP AND EQUIPMENT LEVEL

| | | | | | | | | | EOO | | | | | |
|---|---|---|---|---|---|---|---|---|---|---|---|---|---|---|
| APPLICATION | SUPPLY | HOUSING | MODEL | R404A | R452A | R449A | R134A | R513A | Low noise fan | Fan speed control | Liquid line | Fully equipped electr. box | Acoustic foam in compressor compart. | Acoustic jacket |
| MBP | 1~ | 1 | UP-NEU6212GK | ● | ● | ● | | | ✔ | ✔ | ✔ | ✔ | ✔ | |
| | | | UP-NEU6215GK | ● | ● | ● | | | ✔ | ✔ | ✔ | ✔ | ✔ | |
| | | | UP-NEU6220GK | ● | ● | ● | | | ✔ | ✔ | ✔ | ✔ | ✔ | |
| | | | UP-NT6224GK | ● | ● | ● | | | ✔ | ✔ | ✔ | ✔ | ✔ | |
| | | | UP-NT6226GK | ● | ● | ● | | | ✔ | ✔ | ✔ | ✔ | ✔ | |
| | | | UP-NJ9232GK | ● | ● | ● | | | ✔ | ✔ | ✔ | ✔ | ✔ | |
| | | | UP-NTU6238GKV | ● | ● | ● | | | ✔ | ✔ | ✔ | ✔ | ✔ | |
| | | 2 | UP-SE6015GK | ● | ● | ● | ● | ● | ✔ | ✔ | ✔ | ✔ | ✔ | ✔ |
| | | | UP-SE6018GK | ● | ● | ● | ● | ● | ✔ | ✔ | ✔ | ✔ | ✔ | ✔ |
| | | | UP-SE6021GK | ● | ● | ● | ● | ● | ✔ | ✔ | ✔ | ✔ | ✔ | ✔ |
| | 3~ | 1 | UP-NJ9232GS | ● | ● | ● | | | ✔ | ✔ | ✔ | ✔ | ✔ | |
| | | | UP-NJ9238GS | ● | ● | ● | | | ✔ | ✔ | ✔ | ✔ | ✔ | |
| | | 2 | UP-NJX6250GS | ● | ● | ● | | | ✔ | ✔ | ✔ | ✔ | ✔ | |
| | | | UP-SE6015GS | ● | ● | ● | ● | ● | ✔ | ✔ | ✔ | ✔ | ✔ | ✔ |
| | | | UP-SE6018GS | ● | ● | ● | ● | ● | ✔ | ✔ | ✔ | ✔ | ✔ | ✔ |
| | | | UP-SE6021GS | ● | ● | ● | ● | ● | ✔ | ✔ | ✔ | ✔ | ✔ | ✔ |
| | | 3 | UP-SE6026GS | ● | ● | ● | ● | ● | ✔ | ✔ | ✔ | ✔ | ✔ | ✔ |
| | | | UP-SE6030GS | ● | ● | ● | ● | ● | ✔ | ✔ | ✔ | ✔ | ✔ | ✔ |
| | | | UP-SE6036GS | ● | ● | ● | ● | ● | ✔ | ✔ | ✔ | ✔ | ✔ | ✔ |
| | | | UP-SE6043GS | ● | ● | ● | ● | ● | ✔ | ✔ | ✔ | ✔ | ✔ | ✔ |
| | 1~ | 1 | UP-NEU6214Z | | | | ● | ● | ✔ | ✔ | ✔ | ✔ | ✔ | |
| | | | UP-NJ6220Z | | | | ● | ● | ✔ | ✔ | ✔ | ✔ | ✔ | |
| | | | UP-NJ6226Z | | | | ● | ● | ✔ | ✔ | ✔ | ✔ | ✔ | |
| | 3~ | | UP-NJ6226ZX | | | | ● | ● | ✔ | ✔ | ✔ | ✔ | ✔ | |
| LBP | 1~ | 1 | UP-NT2180GK | ● | ● | | | | ✔ | ✔ | ✔ | ✔ | ✔ | |
| | | | UP-NT2192GK | ● | ● | | | | ✔ | ✔ | ✔ | ✔ | ✔ | |
| | | | UP-NT2212GK | ● | ● | | | | ✔ | ✔ | ✔ | ✔ | ✔ | |
| | | 2 | UP-SE2006GK | ● | ● | ● | | | ✔ | ✔ | ✔ | ✔ | ✔ | ✔ |
| | | | UP-SE2008GK | ● | ● | ● | | | ✔ | ✔ | ✔ | ✔ | ✔ | ✔ |
| | | | UP-SE2010GK | ● | ● | ● | | | ✔ | ✔ | ✔ | ✔ | ✔ | ✔ |
| | 3~ | 2 | UP-NJX2219GS | ● | ● | ● | | | ✔ | ✔ | ✔ | ✔ | ✔ | |
| | | | UP-SE2006GS | ● | ● | ● | | | ✔ | ✔ | ✔ | ✔ | ✔ | ✔ |
| | | | UP-SE2008GS | ● | ● | ● | | | ✔ | ✔ | ✔ | ✔ | ✔ | ✔ |
| | | | UP-SE2010GS | ● | ● | ● | | | ✔ | ✔ | ✔ | ✔ | ✔ | ✔ |
| | | 3 | UP-SE2012GS-O | ● | ● | ● | | | ✔ | ✔ | ✔ | ✔ | ✔ | ✔ |
| | | | UP-SE2014GS-O | ● | ● | ● | | | ✔ | ✔ | ✔ | ✔ | ✔ | ✔ |
| | | | UP-SE2017GS-O | ● | ● | ● | | | ✔ | ✔ | ✔ | ✔ | ✔ | ✔ |
| | | | UP-SE2020GS-O | ● | ● | ● | | | ✔ | ✔ | ✔ | ✔ | ✔ | ✔ |

GENERAL DATA & PERFORMANCE

# R404A - LBP - RTG20

| CONDENSING UNITS | | | | COMPRESSORS | | AMBIENT TEMP. | EN13125 - SUBCOOLING OK - MIDPOINT COOLING CAPACITY (W) | | | | | | POWER INPUT (W) | | | | | | ECO DESIGN | | DIMENSIONS (mm) | | | WEIGHT | ACOUSTICS dB (A) | | CONDENSER/FAN | | | | | | LIQUID RECEIVER | CONNECTION DIAMETERS | | | |
|---|---|---|---|---|---|---|---|---|---|---|---|---|---|---|---|---|---|---|---|---|---|---|---|---|---|---|---|---|---|---|---|---|---|---|---|---|---|
| CONDENSING UNITS MODELS | CONDENSING UNIT BOM | VOLTAGE SUPPLY (V) | I NOM (A) | COMPRESSOR MODELS | COMPRESSOR BOM | (°C) | -35°C | -30°C | -25°C | -20°C | -15°C | -10°C | -35°C | -30°C | -25°C | -20°C | | -15°C | -10°C | Type | Cop/ Seer | W (width) | D (depth) | H (height) | Net (kg) | Sound Press. @10m | Sound power level | Number of fan | Fan diameter (mm) | Airflow ($m^3/h$) | Fan power (W) | Voltage supply (V) | Internal volume ($dm^3$) | $dm^3$ | Suction (mm) | Liquid (mm) | Suction (") | Liquid (") |
| UP-NT2180GK-EAE00 | 503HAS6C4FI | CP: 230V-1ph-50Hz Fan: 230V-1ph-50Hz | 2,4 | NT2180GK-A-CSR | 923HA0404AF | 25 | 632 | 803 | 1009 | 1245 | 1504 | 1780 | 567 | 622 | 683 | 753 | | 835 | 930 | COP | 0,97 | 982 | 484 | 600 | 69 | 29 | 60 | 1 | 350 | 1695 | 67 | 230/1/50 | 0,23 | 1,6 | 12 | 6 | 1/2 | 1/4 |
| | | | | | | 32 | 554 | 712 | 898 | 1107 | 1334 | 1572 | 569 | 638 | 711 | 791 | | 881 | 980 | | | | | | | | | | | | | | | | | | | |
| | | | | | | 38 | 488 | 634 | 801 | 987 | 1185 | 1392 | 575 | 653 | 734 | 820 | | 914 | 1015 | | | | | | | | | | | | | | | | | | | |
| | | | | | | 43 | - | 568 | 720 | 885 | 1060 | 1240 | - | 666 | 752 | 842 | | 937 | 1039 | | | | | | | | | | | | | | | | | | | |
| UP-NT2192GK-EAE00 | 503EAS6C4FI | CP: 230V-1ph-50Hz Fan: 230V-1ph-50Hz | 2,7 | NT2192GK-A-CSR | 923EA0404AF | 25 | 681 | 866 | 1078 | 1315 | 1574 | 1851 | 590 | 663 | 736 | 813 | | 899 | 999 | COP | 0,99 | 982 | 484 | 600 | 69 | 29 | 60 | 1 | 350 | 1695 | 67 | 230/1/50 | 0,23 | 1,6 | 12 | 8 | 1/2 | 3/8 |
| | | | | | | 32 | 594 | 762 | 953 | 1165 | 1396 | 1643 | 600 | 679 | 760 | 846 | | 942 | 1054 | | | | | | | | | | | | | | | | | | | |
| | | | | | | 38 | 523 | 675 | 847 | 1038 | 1244 | 1462 | 605 | 691 | 780 | 875 | | 982 | 1106 | | | | | | | | | | | | | | | | | | | |
| | | | | | | 43 | - | 604 | 760 | 931 | 1116 | 1311 | - | 700 | 796 | 901 | | 1018 | 1152 | | | | | | | | | | | | | | | | | | | |
| UP-NT2212GK-EAE00 | 505DAS6C4FI | CP: 230V-1ph-50Hz Fan: 230V-1ph-50Hz | 3,7 | NT2212GK-A-CSR | 925DA0204AF | 25 | 903 | 1140 | 1423 | 1750 | 2112 | 2504 | 719 | 805 | 899 | 1004 | | 1119 | 1245 | COP | 1,08 | 982 | 484 | 600 | 69 | 29 | 60 | 1 | 350 | 1523 | 67 | 230/1/50 | 0,45 | 2,3 | 16 | 8 | 1/2 | 3/8 |
| | | | | | | 32 | 786 | 1005 | 1265 | 1562 | 1889 | 2239 | 731 | 827 | 933 | 1048 | | 1174 | 1310 | | | | | | | | | | | | | | | | | | | |
| | | | | | | 38 | 694 | 896 | 1133 | 1402 | 1696 | 2010 | 741 | 848 | 964 | 1089 | | 1224 | 1369 | | | | | | | | | | | | | | | | | | | |
| | | | | | | 43 | - | 807 | 1025 | 1268 | 1534 | 1815 | - | 867 | 991 | 1124 | | 1267 | 1420 | | | | | | | | | | | | | | | | | | | |
| UP-NJX2219GS-EAE00 | 545ASS6C3FI | CP: 400V-3ph-50Hz Fan: 230V-1ph-50Hz | 2,3 | NJX2219GS-M | 945AS2101AA | 25 | 1335 | 1714 | 2165 | 2681 | 3252 | 3870 | 1047 | 1180 | 1322 | 1477 | | 1644 | 1825 | COP | 1,12 | 1082 | 490 | 708 | 88 | 34 | 65 | 1 | 400 | 2673 | 120 | 230/1/50 | 0,71 | 3,9 | 16 | 8 | 1/2 | 3/8 |
| | | | | | | 32 | 1213 | 1553 | 1957 | 2417 | 2925 | 3472 | 1083 | 1227 | 1382 | 1549 | | 1731 | 1928 | | | | | | | | | | | | | | | | | | | |
| | | | | | | 38 | 1092 | 1401 | 1766 | 2179 | 2635 | 3123 | 1109 | 1264 | 1431 | 1612 | | 1807 | 2019 | | | | | | | | | | | | | | | | | | | |
| | | | | | | 43 | - | 1266 | 1599 | 1976 | 2388 | 2829 | - | 1291 | 1469 | 1662 | | 1870 | 2095 | | | | | | | | | | | | | | | | | | | |
| UP-SE2006GK-EAE00 | 5S3ACS6C4FI | CP: 230V-1ph-50Hz Fan: 230V-1ph-50Hz | 5,6 | SE2006GK-C | 303AC1204AA | 25 | 1440 | 1779 | 2178 | 2633 | 3145 | 3710 | 1113 | 1185 | 1265 | 1352 | | 1445 | 1546 | COP | 1,07 | 1082 | 490 | 708 | 92 | 33 | 64 | 1 | 400 | 2673 | 120 | 230/1/50 | 0,71 | 3,9 | 18 | 10 | 3/4 | 3/8 |
| | | | | | | 32 | 1321 | 1631 | 1993 | 2406 | 2868 | 3376 | 1235 | 1313 | 1399 | 1491 | | 1591 | 1698 | | | | | | | | | | | | | | | | | | | |
| | | | | | | 38 | 1209 | 1491 | 1819 | 2192 | 2609 | 3068 | 1358 | 1441 | 1532 | 1631 | | 1736 | 1850 | | | | | | | | | | | | | | | | | | | |
| | | | | | | 43 | 1113 | 1370 | 1667 | 2005 | 2383 | 2799 | 1487 | 1575 | 1670 | 1773 | | 1884 | 2003 | | | | | | | | | | | | | | | | | | | |
| UP-SE2006GS-EAE00 | 5S3AOS6C3FI | CP: 400V-3ph-50Hz Fan: 230V-1ph-50Hz | 2,4 | SE2006GS-O | 303AO1201AA | 25 | 1440 | 1780 | 2178 | 2634 | 3146 | 3711 | 1104 | 1176 | 1255 | 1341 | | 1434 | 1533 | COP | 1,08 | 1082 | 490 | 708 | 92 | 33 | 64 | 1 | 400 | 2673 | 120 | 230/1/50 | 0,71 | 3,9 | 18 | 10 | 3/4 | 3/8 |
| | | | | | | 32 | 1321 | 1632 | 1994 | 2407 | 2869 | 3378 | 1225 | 1303 | 1387 | 1479 | | 1578 | 1684 | | | | | | | | | | | | | | | | | | | |
| | | | | | | 38 | 1209 | 1491 | 1820 | 2193 | 2610 | 3070 | 1347 | 1430 | 1520 | 1617 | | 1722 | 1834 | | | | | | | | | | | | | | | | | | | |
| | | | | | | 43 | 1114 | 1370 | 1668 | 2006 | 2385 | 2801 | 1475 | 1561 | 1656 | 1758 | | 1868 | 1986 | | | | | | | | | | | | | | | | | | | |
| UP-SE2008GK-EAE00 | 5S3BCS6C4FI | CP: 230V-1ph-50Hz Fan: 230V-1ph-50Hz | 7,2 | SE2008GK-C | 303BC1204AA | 25 | 1812 | 2233 | 2723 | 3280 | 3899 | 4575 | 1422 | 1521 | 1631 | 1751 | | 1881 | 2022 | COP | 1,05 | 1082 | 490 | 708 | 92 | 33 | 64 | 1 | 400 | 2673 | 120 | 230/1/50 | 0,71 | 3,9 | 18 | 10 | 3/4 | 3/8 |
| | | | | | | 32 | 1656 | 2038 | 2481 | 2982 | 3536 | 4140 | 1581 | 1689 | 1807 | 1935 | | 2074 | 2225 | | | | | | | | | | | | | | | | | | | |
| | | | | | | 38 | 1511 | 1857 | 2255 | 2705 | 3202 | 3742 | 1748 | 1862 | 1988 | 2125 | | 2274 | 2434 | | | | | | | | | | | | | | | | | | | |
| | | | | | | 43 | 1389 | 1701 | 2060 | 2464 | 2911 | 3396 | 1925 | 2046 | 2179 | 2323 | | 2480 | 2649 | | | | | | | | | | | | | | | | | | | |
| UP-SE2008GS-EAE00 | 5S3BOS6C3FI | CP: 400V-3ph-50Hz Fan: 230V-1ph-50Hz | 2,7 | SE2008GS-O | 303BO1201AA | 25 | 1813 | 2234 | 2725 | 3283 | 3902 | 4579 | 1394 | 1492 | 1599 | 1717 | | 1844 | 1982 | COP | 1,07 | 1082 | 490 | 708 | 92 | 33 | 64 | 1 | 400 | 2673 | 120 | 230/1/50 | 0,71 | 3,9 | 18 | 10 | 3/4 | 3/8 |
| | | | | | | 32 | 1657 | 2040 | 2484 | 2985 | 3540 | 4146 | 1551 | 1656 | 1771 | 1897 | | 2033 | 2180 | | | | | | | | | | | | | | | | | | | |
| | | | | | | 38 | 1512 | 1859 | 2258 | 2708 | 3206 | 3748 | 1713 | 1825 | 1949 | 2083 | | 2228 | 2384 | | | | | | | | | | | | | | | | | | | |
| | | | | | | 43 | 1390 | 1703 | 2063 | 2468 | 2916 | 3403 | 1886 | 2005 | 2134 | 2276 | | 2429 | 2594 | | | | | | | | | | | | | | | | | | | |
| UP-SE2010GK-EAE00 | 5S3CCS6C4FI | CP: 230V-1ph-50Hz Fan: 230V-1ph-50Hz | 8,4 | SE2010GK-C | 303CC1204AA | 25 | 2103 | 2586 | 3145 | 3775 | 4470 | 5222 | 1665 | 1787 | 1922 | 2070 | | 2232 | 2408 | COP | 1,03 | 1082 | 490 | 708 | 92 | 33 | 64 | 1 | 400 | 2673 | 120 | 230/1/50 | 0,71 | 3,9 | 18 | 10 | 3/4 | 3/8 |
| | | | | | | 32 | 1916 | 2353 | 2855 | 3418 | 4037 | 4705 | 1855 | 1987 | 2133 | 2292 | | 2466 | 2654 | | | | | | | | | | | | | | | | | | | |
| | | | | | | 38 | 1744 | 2137 | 2587 | 3090 | 3641 | 4235 | 2058 | 2200 | 2356 | 2527 | | 2713 | 2914 | | | | | | | | | | | | | | | | | | | |
| | | | | | | 43 | 1601 | 1954 | 2356 | 2806 | 3298 | 3827 | 2277 | 2427 | 2593 | 2774 | | 2971 | 3184 | | | | | | | | | | | | | | | | | | | |
| UP-SE2010GS-EAE00 | 5S3COS6C3FI | CP: 400V-3ph-50Hz Fan: 230V-1ph-50Hz | 4,3 | SE2010GS-O | 303CO1201AA | 25 | 2105 | 2588 | 3148 | 3779 | 4475 | 5229 | 1628 | 1747 | 1879 | 2023 | | 2181 | 2353 | COP | 1,06 | 1082 | 490 | 708 | 92 | 33 | 64 | 1 | 400 | 2673 | 120 | 230/1/50 | 0,71 | 3,9 | 18 | 10 | 3/4 | 3/8 |
| | | | | | | 32 | 1918 | 2356 | 2859 | 3423 | 4044 | 4714 | 1813 | 1942 | 2084 | 2239 | | 2408 | 2592 | | | | | | | | | | | | | | | | | | | |
| | | | | | | 38 | 1747 | 2141 | 2591 | 3096 | 3649 | 4245 | 2010 | 2149 | 2301 | 2467 | | 2648 | 2844 | | | | | | | | | | | | | | | | | | | |
| | | | | | | 43 | 1604 | 1958 | 2362 | 2813 | 3307 | 3838 | 2223 | 2369 | 2531 | 2707 | | 2898 | 3106 | | | | | | | | | | | | | | | | | | | |
| UP-SE2012GS-EAE00 | 5S3GOS6C3FI | CP: 400V-3ph-50Hz Fan: 230V-1ph-50Hz | 5,4 | SE2012GS-O | 303GO1201AA | 25 | 2802 | 3462 | 4238 | 5125 | 6121 | 7221 | 2101 | 2238 | 2389 | 2553 | | 2731 | 2921 | SEPR | 1,8 | 1277 | 538 | 1005 | 107 | 36 | 67 | 1 | 500 | 5195 | 220 | 230/1/50 | 1,34 | 6 | 22 | 12 | 7/8 | 1/2 |
| | | | | | | 32 | 2571 | 3175 | 3880 | 4684 | 5583 | 6574 | 2332 | 2480 | 2642 | 2817 | | 3006 | 3209 | | | | | | | | | | | | | | | | | | | |
| | | | | | | 38 | 2353 | 2902 | 3542 | 4269 | 5081 | 5975 | 2564 | 2723 | 2895 | 3081 | | 3281 | 3496 | | | | | | | | | | | | | | | | | | | |
| | | | | | | 43 | 2167 | 2667 | 3247 | 3906 | 4642 | 5452 | 2808 | 2974 | 3154 | 3350 | | 3560 | 3784 | | | | | | | | | | | | | | | | | | | |
| UP-SE2014GS-EAE00 | 5S3DOS6C3FI | CP: 400V-3ph-50Hz Fan: 230V-1ph-50Hz | 5,2 | SE2014GS-O | 303DO1201AA | 25 | 3248 | 4008 | 4897 | 5910 | 7041 | 8283 | 2241 | 2393 | 2559 | 2741 | | 2939 | 3152 | SEPR | 1,95 | 1277 | 538 | 1005 | 107 | 36 | 67 | 1 | 500 | 5195 | 220 | 230/1/50 | 1,34 | 6 | 22 | 12 | 7/8 | 1/2 |
| | | | | | | 32 | 2977 | 3670 | 4476 | 5390 | 6409 | 7524 | 2488 | 2651 | 2830 | 3024 | | 3234 | 3461 | | | | | | | | | | | | | | | | | | | |
| | | | | | | 38 | 2721 | 3351 | 4080 | 4906 | 5823 | 6827 | 2740 | 2914 | 3104 | 3311 | | 3534 | 3773 | | | | | | | | | | | | | | | | | | | |
| | | | | | | 43 | 2506 | 3077 | 3737 | 4484 | 5314 | 6221 | 3005 | 3188 | 3388 | 3605 | | 3839 | 4091 | | | | | | | | | | | | | | | | | | | |
| UP-SE2017GS-EAE00 | 5S3EOS6C3FI | CP: 400V-3ph-50Hz Fan: 230V-1ph-50Hz | 6,3 | SE2017GS-O | 303EO1201AA | 25 | 3815 | 4698 | 5725 | 6888 | 8178 | 9583 | 2576 | 2759 | 2960 | 3181 | | 3421 | 3682 | SEPR | 1,98 | 1277 | 538 | 1005 | 107 | 36 | 67 | 1 | 500 | 5195 | 220 | 230/1/50 | 1,34 | 6 | 22 | 12 | 7/8 | 1/2 |
| | | | | | | 32 | 3488 | 4290 | 5217 | 6263 | 7419 | 8675 | 2864 | 3060 | 3276 | 3512 | | 3768 | 4045 | | | | | | | | | | | | | | | | | | | |
| | | | | | | 38 | 3184 | 3910 | 4745 | 5685 | 6722 | 7846 | 3162 | 3372 | 3603 | 3854 | | 4127 | 4422 | | | | | | | | | | | | | | | | | | | |
| | | | | | | 43 | 2928 | 3585 | 4338 | 5184 | 6117 | 7129 | 3480 | 3702 | 3945 | 4210 | | 4497 | 4807 | | | | | | | | | | | | | | | | | | | |
| UP-SE2020GS-EAE00 | 5S3FOS6C3FI | CP: 400V-3ph-50Hz Fan: 230V-1ph-50Hz | 6,9 | SE2020GS-O | 303FO1201AA | 25 | 4416 | 5425 | 6591 | 7903 | 9346 | 10904 | 3006 | 3229 | 3476 | 3748 | | 4045 | 4369 | SEPR | 1,95 | 1277 | 538 | 1005 | 107 | 36 | 67 | 1 | 500 | 5195 | 220 | 230/1/50 | 1,34 | 6 | 22 | 12 | 7/8 | 1/2 |
| | | | | | | 32 | 4025 | 4938 | 5987 | 7160 | 8446 | 9830 | 3347 | 3587 | 3853 | 4145 | | 4463 | 4809 | | | | | | | | | | | | | | | | | | | |
| | | | | | | 38 | 3667 | 4490 | 5430 | 6478 | 7625 | 8857 | 3709 | 3967 | 4252 | 4564 | | 4904 | 5274 | | | | | | | | | | | | | | | | | | | |
| | | | | | | 43 | 3370 | 4109 | 4952 | 5891 | 6916 | 8016 | 4098 | 4372 | 4674 | 5004 | | 5364 | 5754 | | | | | | | | | | | | | | | | | | | |

**Note:** *Subject to modification without prior notification.*

GENERAL DATA & PERFORMANCE

# R404A - LBP - SH10K

| CONDENSING UNITS | | | | COMPRESSORS | | AMBIENT TEMP. | EN13125 - SUBCOOLING 0K - MIDPOINT COOLING CAPACITY (W) | | | | | | POWER INPUT (W) | | | | | | ECO DESIGN | | DIMENSIONS (mm) | | | WEIGHT | ACOUSTICS dB (A) | | CONDENSER/FAN | | | | | | LIQUID RECEIVER | CONNECTION DIAMETERS | | | |
|---|---|---|---|---|---|---|---|---|---|---|---|---|---|---|---|---|---|---|---|---|---|---|---|---|---|---|---|---|---|---|---|---|---|---|---|---|---|
| CONDENSING UNITS MODELS | CONDENSING UNIT BOM | VOLTAGE SUPPLY (V) | I NOM (A) | COMPRESSOR MODELS | COMPRESSOR BOM | (°C) | -35°C | -30°C | -25°C | -20°C | -15°C | -10°C | -35°C | -30°C | -25°C | -20°C | | -15°C | -10°C | Type | Cop/ Seer | W (width) | D (depth) | H (height) | Net (kg) | Sound Press. @10m | Sound power level | Number of fan | Fan diameter (mm) | Airflow (m³/h) | Fan power (W) | Voltage supply (V) | Internal volume (dm³) | dm³ | Suction (mm) | Liquid (mm) | Suction (") | Liquid (") |
| UP-NT2180GK-EAE00 | 503HAS6C4FI | CP: 230V-1ph-50Hz Fan: 230V-1ph-50Hz | 2,4 | NT2180GK-A-CSR | 923HA0404AF | 25 | 562 | 729 | 931 | 1165 | 1425 | 1705 | 569 | 619 | 676 | 742 | | 821 | 915 | - | - | 982 | 484 | 600 | 69 | 29 | 60 | 1 | 350 | 1695 | 67 | 230/1/50 | 0,23 | 1,6 | 12 | 6 | 1/2 | 1/4 |
| | | | | | | 32 | 492 | 640 | 818 | 1021 | 1246 | 1487 | 562 | 627 | 698 | 777 | | 865 | 965 | | | | | | | | | | | | | | | | | | | |
| | | | | | | 38 | 421 | 555 | 712 | 891 | 1087 | 1298 | 566 | 642 | 721 | 806 | | 898 | 1000 | | | | | | | | | | | | | | | | | | | |
| | | | | | | 43 | - | 482 | 623 | 782 | 957 | 1143 | - | 655 | 739 | 826 | | 920 | 1021 | | | | | | | | | | | | | | | | | | | |
| UP-NT2192GK-EAE00 | 503EAS6C4FI | CP: 230V-1ph-50Hz Fan: 230V-1ph-50Hz | 2,7 | NT2192GK-A-CSR | 923EA0404AF | 25 | 607 | 787 | 995 | 1230 | 1490 | 1771 | 585 | 655 | 726 | 801 | | 886 | 984 | - | - | 982 | 484 | 600 | 69 | 29 | 60 | 1 | 350 | 1695 | 67 | 230/1/50 | 0,23 | 1,6 | 12 | 8 | 1/2 | 3/8 |
| | | | | | | 32 | 527 | 684 | 867 | 1073 | 1302 | 1550 | 592 | 669 | 747 | 831 | | 926 | 1036 | | | | | | | | | | | | | | | | | | | |
| | | | | | | 38 | 451 | 590 | 752 | 935 | 1139 | 1360 | 597 | 680 | 766 | 859 | | 963 | 1084 | | | | | | | | | | | | | | | | | | | |
| | | | | | | 43 | - | 512 | 657 | 822 | 1005 | 1205 | - | 688 | 781 | 882 | | 995 | 1127 | | | | | | | | | | | | | | | | | | | |
| UP-NT2212GK-EAE00 | 505DAS6C4FI | CP: 230V-1ph-50Hz Fan: 230V-1ph-50Hz | 3,7 | NT2212GK-A-CSR | 925DA0204AF | 25 | 801 | 1032 | 1312 | 1637 | 2002 | 2402 | 715 | 797 | 889 | 990 | | 1104 | 1229 | - | - | 982 | 484 | 600 | 69 | 29 | 60 | 1 | 350 | 1523 | 67 | 230/1/50 | 0,45 | 2,3 | 16 | 8 | 1/2 | 3/8 |
| | | | | | | 32 | 699 | 906 | 1155 | 1444 | 1767 | 2123 | 722 | 815 | 918 | 1031 | | 1155 | 1290 | | | | | | | | | | | | | | | | | | | |
| | | | | | | 38 | 601 | 787 | 1010 | 1269 | 1559 | 1876 | 730 | 834 | 947 | 1069 | | 1202 | 1346 | | | | | | | | | | | | | | | | | | | |
| | | | | | | 43 | - | 688 | 890 | 1123 | 1385 | 1672 | - | 851 | 972 | 1102 | | 1242 | 1393 | | | | | | | | | | | | | | | | | | | |
| UP-NJX2219GS-EAE00 | 545ASS6C3FI | CP: 400V-3ph-50Hz Fan: 230V-1ph-50Hz | 2,3 | NJX2219GS-M | 945AS2101AA | 25 | 1214 | 1575 | 2010 | 2516 | 3086 | 3714 | 1036 | 1166 | 1306 | 1457 | | 1623 | 1803 | - | - | 1082 | 490 | 708 | 88 | 34 | 65 | 1 | 400 | 2673 | 120 | 230/1/50 | 0,71 | 3,9 | 16 | 8 | 1/2 | 3/8 |
| | | | | | | 32 | 1074 | 1395 | 1782 | 2231 | 2737 | 3294 | 1070 | 1210 | 1361 | 1525 | | 1704 | 1900 | | | | | | | | | | | | | | | | | | | |
| | | | | | | 38 | 942 | 1229 | 1575 | 1976 | 2428 | 2926 | 1093 | 1244 | 1407 | 1583 | | 1776 | 1985 | | | | | | | | | | | | | | | | | | | |
| | | | | | | 43 | 825 | 1084 | 1397 | 1759 | 2167 | 2615 | 1107 | 1268 | 1442 | 1630 | | 1834 | 2057 | | | | | | | | | | | | | | | | | | | |
| UP-SE2006GK-EAE00 | 5S3ACS6C4FI | CP: 230V-1ph-50Hz Fan: 230V-1ph-50Hz | 5,6 | SE2006GK-C | 303AC1204AA | 25 | 1300 | 1627 | 2017 | 2469 | 2984 | 3561 | 1123 | 1188 | 1260 | 1340 | | 1429 | 1526 | - | - | 1082 | 490 | 708 | 92 | 33 | 64 | 1 | 400 | 2673 | 120 | 230/1/50 | 0,71 | 3,9 | 18 | 10 | 3/4 | 3/8 |
| | | | | | | 32 | 1169 | 1464 | 1815 | 2221 | 2684 | 3203 | 1212 | 1287 | 1369 | 1459 | | 1558 | 1667 | | | | | | | | | | | | | | | | | | | |
| | | | | | | 38 | 1040 | 1305 | 1620 | 1986 | 2403 | 2872 | 1328 | 1409 | 1497 | 1594 | | 1700 | 1816 | | | | | | | | | | | | | | | | | | | |
| | | | | | | 43 | 928 | 1166 | 1450 | 1781 | 2159 | 2585 | 1455 | 1538 | 1630 | 1731 | | 1842 | 1961 | | | | | | | | | | | | | | | | | | | |
| UP-SE2006GS-EAE00 | 5S3AOS6C3FI | CP: 400V-3ph-50Hz Fan: 230V-1ph-50Hz | 2,4 | SE2006GS-O | 303AO1201AA | 25 | 1300 | 1628 | 2017 | 2470 | 2985 | 3562 | 1114 | 1179 | 1250 | 1329 | | 1417 | 1514 | - | - | 1082 | 490 | 708 | 92 | 33 | 64 | 1 | 400 | 2673 | 120 | 230/1/50 | 0,71 | 3,9 | 18 | 10 | 3/4 | 3/8 |
| | | | | | | 32 | 1169 | 1465 | 1815 | 2222 | 2685 | 3204 | 1203 | 1276 | 1358 | 1447 | | 1546 | 1653 | | | | | | | | | | | | | | | | | | | |
| | | | | | | 38 | 1040 | 1306 | 1621 | 1987 | 2404 | 2873 | 1318 | 1397 | 1485 | 1581 | | 1686 | 1800 | | | | | | | | | | | | | | | | | | | |
| | | | | | | 43 | 928 | 1167 | 1451 | 1782 | 2160 | 2586 | 1443 | 1525 | 1617 | 1717 | | 1826 | 1945 | | | | | | | | | | | | | | | | | | | |
| UP-SE2008GK-EAE00 | 5S3BCS6C4FI | CP: 230V-1ph-50Hz Fan: 230V-1ph-50Hz | 7,2 | SE2008GK-C | 303BC1204AA | 25 | 1633 | 2038 | 2516 | 3067 | 3689 | 4379 | 1422 | 1511 | 1611 | 1722 | | 1847 | 1986 | - | - | 1082 | 490 | 708 | 92 | 33 | 64 | 1 | 400 | 2673 | 120 | 230/1/50 | 0,71 | 3,9 | 18 | 10 | 3/4 | 3/8 |
| | | | | | | 32 | 1460 | 1823 | 2250 | 2742 | 3297 | 3914 | 1547 | 1649 | 1762 | 1888 | | 2027 | 2179 | | | | | | | | | | | | | | | | | | | |
| | | | | | | 38 | 1293 | 1617 | 1999 | 2439 | 2936 | 3489 | 1706 | 1816 | 1938 | 2072 | | 2220 | 2382 | | | | | | | | | | | | | | | | | | | |
| | | | | | | 43 | 1149 | 1439 | 1781 | 2176 | 2624 | 3124 | 1877 | 1991 | 2118 | 2258 | | 2411 | 2578 | | | | | | | | | | | | | | | | | | | |
| UP-SE2008GS-EAE00 | 5S3BOS6C3FI | CP: 400V-3ph-50Hz Fan: 230V-1ph-50Hz | 2,7 | SE2008GS-O | 303BO1201AA | 25 | 1634 | 2040 | 2518 | 3070 | 3693 | 4384 | 1395 | 1482 | 1580 | 1689 | | 1811 | 1947 | - | - | 1082 | 490 | 708 | 92 | 33 | 64 | 1 | 400 | 2673 | 120 | 230/1/50 | 0,71 | 3,9 | 18 | 10 | 3/4 | 3/8 |
| | | | | | | 32 | 1462 | 1825 | 2253 | 2746 | 3302 | 3919 | 1517 | 1617 | 1728 | 1851 | | 1986 | 2136 | | | | | | | | | | | | | | | | | | | |
| | | | | | | 38 | 1295 | 1620 | 2002 | 2443 | 2941 | 3495 | 1672 | 1780 | 1899 | 2031 | | 2175 | 2334 | | | | | | | | | | | | | | | | | | | |
| | | | | | | 43 | 1151 | 1442 | 1785 | 2181 | 2630 | 3131 | 1839 | 1951 | 2075 | 2212 | | 2362 | 2525 | | | | | | | | | | | | | | | | | | | |
| UP-SE2010GK-EAE00 | 5S3CCS6C4FI | CP: 230V-1ph-50Hz Fan: 230V-1ph-50Hz | 8,4 | SE2010GK-C | 303CC1204AA | 25 | 1892 | 2356 | 2900 | 3523 | 4220 | 4987 | 1655 | 1764 | 1888 | 2027 | | 2183 | 2358 | - | - | 1082 | 490 | 708 | 92 | 33 | 64 | 1 | 400 | 2673 | 120 | 230/1/50 | 0,71 | 3,9 | 18 | 10 | 3/4 | 3/8 |
| | | | | | | 32 | 1685 | 2098 | 2582 | 3134 | 3754 | 4436 | 1811 | 1936 | 2076 | 2232 | | 2405 | 2596 | | | | | | | | | | | | | | | | | | | |
| | | | | | | 38 | 1486 | 1854 | 2284 | 2776 | 3328 | 3936 | 2005 | 2140 | 2290 | 2457 | | 2641 | 2842 | | | | | | | | | | | | | | | | | | | |
| | | | | | | 43 | 1318 | 1645 | 2028 | 2468 | 2962 | 3510 | 2214 | 2354 | 2510 | 2683 | | 2873 | 3080 | | | | | | | | | | | | | | | | | | | |
| UP-SE2010GS-EAE00 | 5S3COS6C3FI | CP: 400V-3ph-50Hz Fan: 230V-1ph-50Hz | 4,3 | SE2010GS-O | 303CO1201AA | 25 | 1894 | 2358 | 2903 | 3527 | 4226 | 4995 | 1618 | 1725 | 1846 | 1981 | | 2134 | 2304 | - | - | 1082 | 490 | 708 | 92 | 33 | 64 | 1 | 400 | 2673 | 120 | 230/1/50 | 0,71 | 3,9 | 18 | 10 | 3/4 | 3/8 |
| | | | | | | 32 | 1687 | 2101 | 2586 | 3140 | 3761 | 4444 | 1770 | 1892 | 2028 | 2180 | | 2349 | 2535 | | | | | | | | | | | | | | | | | | | |
| | | | | | | 38 | 1489 | 1858 | 2289 | 2782 | 3336 | 3947 | 1959 | 2090 | 2237 | 2399 | | 2578 | 2775 | | | | | | | | | | | | | | | | | | | |
| | | | | | | 43 | 1321 | 1649 | 2034 | 2475 | 2971 | 3521 | 2162 | 2298 | 2451 | 2619 | | 2804 | 3006 | | | | | | | | | | | | | | | | | | | |
| UP-SE2012GS-EAE00 | 5S3GOS6C3FI | CP: 400V-3ph-50Hz Fan: 230V-1ph-50Hz | 5,4 | SE2012GS-O | 303GO1201AA | 25 | 2529 | 3167 | 3925 | 4805 | 5808 | 6931 | 2120 | 2244 | 2380 | 2532 | | 2699 | 2884 | - | - | 1277 | 538 | 1005 | 107 | 36 | 67 | 1 | 500 | 5195 | 220 | 230/1/50 | 1,34 | 6 | 22 | 12 | 7/8 | 1/2 |
| | | | | | | 32 | 2276 | 2851 | 3533 | 4324 | 5225 | 6236 | 2289 | 2430 | 2586 | 2757 | | 2944 | 3150 | | | | | | | | | | | | | | | | | | | |
| | | | | | | 38 | 2025 | 2542 | 3155 | 3867 | 4680 | 5593 | 2509 | 2660 | 2828 | 3012 | | 3213 | 3431 | | | | | | | | | | | | | | | | | | | |
| | | | | | | 43 | 1807 | 2272 | 2825 | 3469 | 4206 | 5036 | 2747 | 2905 | 3080 | 3271 | | 3479 | 3706 | | | | | | | | | | | | | | | | | | | |
| UP-SE2014GS-EAE00 | 5S3DOS6C3FI | CP: 400V-3ph-50Hz Fan: 230V-1ph-50Hz | 5,2 | SE2014GS-O | 303DO1201AA | 25 | 2931 | 3663 | 4532 | 5535 | 6673 | 7941 | 2252 | 2388 | 2539 | 2707 | | 2894 | 3102 | - | - | 1277 | 538 | 1005 | 107 | 36 | 67 | 1 | 500 | 5195 | 220 | 230/1/50 | 1,34 | 6 | 22 | 12 | 7/8 | 1/2 |
| | | | | | | 32 | 2631 | 3290 | 4069 | 4969 | 5989 | 7127 | 2439 | 2593 | 2765 | 2955 | | 3164 | 3393 | | | | | | | | | | | | | | | | | | | |
| | | | | | | 38 | 2338 | 2930 | 3629 | 4437 | 5355 | 6381 | 2677 | 2844 | 3029 | 3232 | | 3455 | 3699 | | | | | | | | | | | | | | | | | | | |
| | | | | | | 43 | 2085 | 2616 | 3246 | 3975 | 4806 | 5737 | 2935 | 3109 | 3301 | 3513 | | 3744 | 3996 | | | | | | | | | | | | | | | | | | | |
| UP-SE2017GS-EAE00 | 5S3EOS6C3FI | CP: 400V-3ph-50Hz Fan: 230V-1ph-50Hz | 6,3 | SE2017GS-O | 303EO1201AA | 25 | 3438 | 4288 | 5290 | 6441 | 7737 | 9170 | 2574 | 2737 | 2920 | 3125 | | 3355 | 3612 | - | - | 1277 | 538 | 1005 | 107 | 36 | 67 | 1 | 500 | 5195 | 220 | 230/1/50 | 1,34 | 6 | 22 | 12 | 7/8 | 1/2 |
| | | | | | | 32 | 3076 | 3837 | 4732 | 5760 | 6917 | 8198 | 2800 | 2986 | 3194 | 3425 | | 3680 | 3961 | | | | | | | | | | | | | | | | | | | |
| | | | | | | 38 | 2726 | 3407 | 4207 | 5127 | 6164 | 7315 | 3085 | 3286 | 3509 | 3756 | | 4027 | 4325 | | | | | | | | | | | | | | | | | | | |
| | | | | | | 43 | 2426 | 3036 | 3753 | 4581 | 5516 | 6557 | 3391 | 3600 | 3832 | 4088 | | 4369 | 4676 | | | | | | | | | | | | | | | | | | | |
| UP-SE2020GS-EAE00 | 5S3FOS6C3FI | CP: 400V-3ph-50Hz Fan: 230V-1ph-50Hz | 6,9 | SE2020GS-O | 303FO1201AA | 25 | 3973 | 4943 | 6079 | 7375 | 8822 | 10410 | 2985 | 3185 | 3411 | 3666 | | 3953 | 4275 | - | - | 1277 | 538 | 1005 | 107 | 36 | 67 | 1 | 500 | 5195 | 220 | 230/1/50 | 1,34 | 6 | 22 | 12 | 7/8 | 1/2 |
| | | | | | | 32 | 3540 | 4405 | 5414 | 6566 | 7852 | 9265 | 3265 | 3492 | 3748 | 4033 | | 4350 | 4701 | | | | | | | | | | | | | | | | | | | |
| | | | | | | 38 | 3128 | 3897 | 4796 | 5822 | 6970 | 8234 | 3611 | 3856 | 4131 | 4435 | | 4771 | 5140 | | | | | | | | | | | | | | | | | | | |
| | | | | | | 43 | 2777 | 3463 | 4266 | 5184 | 6216 | 7354 | 3981 | 4237 | 4521 | 4836 | | 5183 | 5562 | | | | | | | | | | | | | | | | | | | |

**Note:** *Subject to modification without prior notification.*

embraco

GENERAL DATA & PERFORMANCE

# R452A - LBP - RTG20

| CONDENSING UNITS | | | | COMPRESSORS | | AMBIENT TEMP. | EN13125 - SUBCOOLING 0K - MIDPOINT COOLING CAPACITY (W) | | | | | | POWER INPUT (W) | | | | | | ECO DESIGN | | DIMENSIONS (mm) | | | WEIGHT | ACOUSTICS dB (A) | | CONDENSER/FAN | | | | | | LIQUID RECEIVER | CONNECTION DIAMETERS | | | |
|---|---|---|---|---|---|---|---|---|---|---|---|---|---|---|---|---|---|---|---|---|---|---|---|---|---|---|---|---|---|---|---|---|---|---|---|---|---|
| CONDENSING UNITS MODELS | CONDENSING UNIT BOM | VOLTAGE SUPPLY (V) | I NOM (A) | COMPRESSOR MODELS | COMPRESSOR BOM | (°C) | -35°C | -30°C | -25°C | -20°C | -15°C | -10°C | -35°C | -30°C | -25°C | -20°C | | -15°C | -10°C | Type | Cop/ Seer | W (width) | D (depth) | H (height) | Net (kg) | Sound Press. @10m | Sound power level | Number of fan | Fan diameter (mm) | Airflow ($m^3/h$) | Fan power (W) | Voltage supply (V) | Internal volume ($dm^3$) | $dm^3$ | Suction (mm) | Liquid (mm) | Suction (") | Liquid (") |
| UP-NT2180GK-EAE00 | 503HAS6C4FI | CP: 230V-1ph-50Hz Fan: 230V-1ph-50Hz | 2,4 | NT2180GK-A-CSR | 923HA0404AF | 25 | 625 | 793 | 999 | 1238 | 1507 | 1799 | 560 | 617 | 682 | 759 | | 849 | 954 | COP | 0,98 | 982 | 484 | 600 | 69 | 29 | 60 | 1 | 350 | 1695 | 67 | 230/1/50 | 0,23 | 1,6 | 12 | 6 | 1/2 | 1/4 |
| | | | | | | 32 | 544 | 700 | 886 | 1097 | 1331 | 1583 | 557 | 631 | 710 | 797 | | 894 | 1001 | | | | | | | | | | | | | | | | | | | |
| | | | | | | 38 | 472 | 617 | 783 | 970 | 1175 | 1393 | 564 | 647 | 733 | 824 | | 921 | 1026 | | | | | | | | | | | | | | | | | | | |
| | | | | | | 43 | - | 547 | 698 | 864 | 1044 | 1234 | - | 658 | 747 | 838 | | 933 | 1033 | | | | | | | | | | | | | | | | | | | |
| UP-NT2192GK-EAE00 | 503EAS6C4FI | CP: 230V-1ph-50Hz Fan: 230V-1ph-50Hz | 2,7 | NT2192GK-A-CSR | 923EA0404AF | 25 | 674 | 853 | 1063 | 1304 | 1575 | 1872 | 585 | 658 | 734 | 818 | | 913 | 1025 | COP | 1 | 982 | 484 | 600 | 69 | 29 | 60 | 1 | 350 | 1695 | 67 | 230/1/50 | 0,23 | 1,6 | 12 | 8 | 1/2 | 3/8 |
| | | | | | | 32 | 583 | 747 | 937 | 1153 | 1393 | 1656 | 590 | 673 | 759 | 852 | | 957 | 1079 | | | | | | | | | | | | | | | | | | | |
| | | | | | | 38 | 506 | 655 | 827 | 1020 | 1234 | 1467 | 593 | 684 | 778 | 879 | | 992 | 1121 | | | | | | | | | | | | | | | | | | | |
| | | | | | | 43 | - | 582 | 736 | 910 | 1101 | 1308 | - | 690 | 790 | 897 | | 1016 | 1151 | | | | | | | | | | | | | | | | | | | |
| UP-NT2212GK-EAE00 | 505DAS6C4FI | CP: 230V-1ph-50Hz Fan: 230V-1ph-50Hz | 3,7 | NT2212GK-A-CSR | 925DA0204AF | 25 | 890 | 1122 | 1406 | 1740 | 2121 | 2544 | 713 | 801 | 899 | 1010 | | 1135 | 1274 | COP | 1,09 | 982 | 484 | 600 | 69 | 29 | 60 | 1 | 350 | 1523 | 67 | 230/1/50 | 0,45 | 2,3 | 16 | 8 | 1/2 | 3/8 |
| | | | | | | 32 | 773 | 990 | 1251 | 1553 | 1895 | 2271 | 718 | 822 | 934 | 1058 | | 1193 | 1341 | | | | | | | | | | | | | | | | | | | |
| | | | | | | 38 | 673 | 874 | 1113 | 1386 | 1692 | 2028 | 727 | 842 | 965 | 1097 | | 1239 | 1391 | | | | | | | | | | | | | | | | | | | |
| | | | | | | 43 | - | 780 | 998 | 1245 | 1521 | 1821 | - | 857 | 987 | 1125 | | 1270 | 1425 | | | | | | | | | | | | | | | | | | | |
| UP-NJX2219GS-EAE00 | 545ASS6C3FI | CP: 400V-3ph-50Hz Fan: 230V-1ph-50Hz | 2,3 | NJX2219GS-M | 945AS2101AA | 25 | 1231 | 1604 | 2059 | 2586 | 3174 | 3812 | 1000 | 1138 | 1290 | 1457 | | 1640 | 1840 | COP | 1,09 | 1082 | 490 | 708 | 88 | 34 | 65 | 1 | 400 | 2673 | 120 | 230/1/50 | 0,71 | 3,9 | 16 | 8 | 1/2 | 3/8 |
| | | | | | | 32 | 1129 | 1468 | 1876 | 2346 | 2866 | 3427 | 1042 | 1189 | 1351 | 1528 | | 1722 | 1931 | | | | | | | | | | | | | | | | | | | |
| | | | | | | 38 | 1018 | 1328 | 1698 | 2119 | 2582 | 3079 | 1064 | 1223 | 1397 | 1586 | | 1791 | 2012 | | | | | | | | | | | | | | | | | | | |
| | | | | | | 43 | 913 | 1200 | 1538 | 1920 | 2336 | 2780 | 1074 | 1245 | 1430 | 1631 | | 1847 | 2080 | | | | | | | | | | | | | | | | | | | |
| UP-SE2006GK-EAE00 | 5S3ACS6C4FI | CP: 230V-1ph-50Hz Fan: 230V-1ph-50Hz | 5,6 | SE2006GK-C | 303AC1204AA | 25 | 1435 | 1750 | 2129 | 2576 | 3099 | 3699 | 1115 | 1186 | 1264 | 1349 | | 1440 | 1539 | COP | 1,08 | 1082 | 490 | 708 | 92 | 33 | 64 | 1 | 400 | 2673 | 120 | 230/1/50 | 0,71 | 3,9 | 18 | 10 | 3/4 | 3/8 |
| | | | | | | 32 | 1318 | 1612 | 1962 | 2374 | 2854 | 3404 | 1240 | 1319 | 1405 | 1498 | | 1599 | 1706 | | | | | | | | | | | | | | | | | | | |
| | | | | | | 38 | 1210 | 1480 | 1800 | 2177 | 2615 | 3118 | 1366 | 1450 | 1542 | 1642 | | 1749 | 1865 | | | | | | | | | | | | | | | | | | | |
| | | | | | | 43 | 1120 | 1365 | 1656 | 2000 | 2400 | 2861 | 1493 | 1580 | 1676 | 1780 | | 1893 | 2015 | | | | | | | | | | | | | | | | | | | |
| UP-SE2006GS-EAE00 | 5S3AOS6C3FI | CP: 400V-3ph-50Hz Fan: 230V-1ph-50Hz | 2,4 | SE2006GS-O | 303AO1201AA | 25 | 1436 | 1751 | 2129 | 2577 | 3099 | 3700 | 1106 | 1177 | 1254 | 1338 | | 1428 | 1526 | COP | 1,09 | 1082 | 490 | 708 | 92 | 33 | 64 | 1 | 400 | 2673 | 120 | 230/1/50 | 0,71 | 3,9 | 18 | 10 | 3/4 | 3/8 |
| | | | | | | 32 | 1318 | 1612 | 1963 | 2375 | 2855 | 3405 | 1231 | 1308 | 1393 | 1486 | | 1585 | 1692 | | | | | | | | | | | | | | | | | | | |
| | | | | | | 38 | 1211 | 1480 | 1801 | 2178 | 2616 | 3120 | 1355 | 1438 | 1529 | 1628 | | 1735 | 1849 | | | | | | | | | | | | | | | | | | | |
| | | | | | | 43 | 1120 | 1365 | 1657 | 2001 | 2401 | 2863 | 1481 | 1567 | 1662 | 1765 | | 1877 | 1998 | | | | | | | | | | | | | | | | | | | |
| UP-SE2008GK-EAE00 | 5S3BCS6C4FI | CP: 230V-1ph-50Hz Fan: 230V-1ph-50Hz | 7,2 | SE2008GK-C | 303BC1204AA | 25 | 1806 | 2199 | 2669 | 3220 | 3858 | 4584 | 1424 | 1522 | 1630 | 1749 | | 1879 | 2020 | COP | 1,05 | 1082 | 490 | 708 | 92 | 33 | 64 | 1 | 400 | 2673 | 120 | 230/1/50 | 0,71 | 3,9 | 18 | 10 | 3/4 | 3/8 |
| | | | | | | 32 | 1654 | 2017 | 2448 | 2951 | 3531 | 4191 | 1589 | 1696 | 1815 | 1945 | | 2087 | 2240 | | | | | | | | | | | | | | | | | | | |
| | | | | | | 38 | 1515 | 1846 | 2236 | 2692 | 3218 | 3816 | 1758 | 1872 | 1999 | 2137 | | 2289 | 2453 | | | | | | | | | | | | | | | | | | | |
| | | | | | | 43 | 1399 | 1697 | 2050 | 2461 | 2938 | 3481 | 1930 | 2048 | 2180 | 2326 | | 2484 | 2656 | | | | | | | | | | | | | | | | | | | |
| UP-SE2008GS-EAE00 | 5S3BOS6C3FI | CP: 400V-3ph-50Hz Fan: 230V-1ph-50Hz | 2,7 | SE2008GS-O | 303BO1201AA | 25 | 1807 | 2201 | 2670 | 3222 | 3860 | 4588 | 1397 | 1493 | 1599 | 1715 | | 1842 | 1980 | COP | 1,08 | 1082 | 490 | 708 | 92 | 33 | 64 | 1 | 400 | 2673 | 120 | 230/1/50 | 0,71 | 3,9 | 18 | 10 | 3/4 | 3/8 |
| | | | | | | 32 | 1655 | 2019 | 2450 | 2954 | 3535 | 4196 | 1558 | 1663 | 1779 | 1906 | | 2045 | 2195 | | | | | | | | | | | | | | | | | | | |
| | | | | | | 38 | 1516 | 1848 | 2239 | 2696 | 3222 | 3822 | 1723 | 1835 | 1959 | 2094 | | 2242 | 2403 | | | | | | | | | | | | | | | | | | | |
| | | | | | | 43 | 1400 | 1700 | 2053 | 2465 | 2943 | 3488 | 1891 | 2007 | 2136 | 2278 | | 2433 | 2602 | | | | | | | | | | | | | | | | | | | |
| UP-SE2010GK-EAE00 | 5S3CCS6C4FI | CP: 230V-1ph-50Hz Fan: 230V-1ph-50Hz | 8,4 | SE2010GK-C | 303CC1204AA | 25 | 2097 | 2550 | 3087 | 3715 | 4436 | 5251 | 1668 | 1788 | 1922 | 2071 | | 2234 | 2412 | COP | 1,04 | 1082 | 490 | 708 | 92 | 33 | 64 | 1 | 400 | 2673 | 120 | 230/1/50 | 0,71 | 3,9 | 18 | 10 | 3/4 | 3/8 |
| | | | | | | 32 | 1915 | 2331 | 2821 | 3390 | 4041 | 4776 | 1865 | 1997 | 2143 | 2304 | | 2482 | 2675 | | | | | | | | | | | | | | | | | | | |
| | | | | | | 38 | 1751 | 2128 | 2569 | 3081 | 3667 | 4328 | 2069 | 2209 | 2365 | 2538 | | 2727 | 2933 | | | | | | | | | | | | | | | | | | | |
| | | | | | | 43 | 1615 | 1952 | 2347 | 2806 | 3333 | 3929 | 2278 | 2424 | 2587 | 2767 | | 2965 | 3182 | | | | | | | | | | | | | | | | | | | |
| UP-SE2010GS-EAE00 | 5S3COS6C3FI | CP: 400V-3ph-50Hz Fan: 230V-1ph-50Hz | 4,3 | SE2010GS-O | 303CO1201AA | 25 | 2099 | 2552 | 3090 | 3718 | 4441 | 5258 | 1631 | 1748 | 1879 | 2023 | | 2182 | 2356 | COP | 1,06 | 1082 | 490 | 708 | 92 | 33 | 64 | 1 | 400 | 2673 | 120 | 230/1/50 | 0,71 | 3,9 | 18 | 10 | 3/4 | 3/8 |
| | | | | | | 32 | 1917 | 2334 | 2825 | 3395 | 4047 | 4784 | 1823 | 1951 | 2094 | 2251 | | 2424 | 2612 | | | | | | | | | | | | | | | | | | | |
| | | | | | | 38 | 1753 | 2131 | 2573 | 3086 | 3674 | 4337 | 2021 | 2158 | 2310 | 2478 | | 2662 | 2863 | | | | | | | | | | | | | | | | | | | |
| | | | | | | 43 | 1618 | 1956 | 2352 | 2813 | 3341 | 3940 | 2225 | 2367 | 2526 | 2701 | | 2894 | 3105 | | | | | | | | | | | | | | | | | | | |
| UP-SE2012GS-EAE00 | 5S3GOS6C3FI | CP: 400V-3ph-50Hz Fan: 230V-1ph-50Hz | 5,4 | SE2012GS-O | 303GO1201AA | 25 | 2793 | 3406 | 4142 | 5014 | 6030 | 7198 | 2105 | 2240 | 2387 | 2547 | | 2721 | 2907 | SEPR | 1,77 | 1277 | 538 | 1005 | 107 | 36 | 67 | 1 | 500 | 5195 | 220 | 230/1/50 | 1,34 | 6 | 22 | 12 | 7/8 | 1/2 |
| | | | | | | 32 | 2565 | 3137 | 3819 | 4621 | 5555 | 6626 | 2342 | 2491 | 2653 | 2830 | | 3020 | 3225 | | | | | | | | | | | | | | | | | | | |
| | | | | | | 38 | 2356 | 2881 | 3505 | 4239 | 5092 | 6072 | 2581 | 2739 | 2912 | 3101 | | 3306 | 3525 | | | | | | | | | | | | | | | | | | | |
| | | | | | | 43 | 2180 | 2657 | 3225 | 3894 | 4674 | 5573 | 2820 | 2984 | 3165 | 3363 | | 3577 | 3808 | | | | | | | | | | | | | | | | | | | |
| UP-SE2014GS-EAE00 | 5S3DOS6C3FI | CP: 400V-3ph-50Hz Fan: 230V-1ph-50Hz | 5,2 | SE2014GS-O | 303DO1201AA | 25 | 3238 | 3945 | 4792 | 5791 | 6951 | 8278 | 2246 | 2394 | 2558 | 2737 | | 2931 | 3142 | SEPR | 1,91 | 1277 | 538 | 1005 | 107 | 36 | 67 | 1 | 500 | 5195 | 220 | 230/1/50 | 1,34 | 6 | 22 | 12 | 7/8 | 1/2 |
| | | | | | | 32 | 2971 | 3628 | 4410 | 5326 | 6387 | 7599 | 2500 | 2663 | 2843 | 3039 | | 3251 | 3481 | | | | | | | | | | | | | | | | | | | |
| | | | | | | 38 | 2726 | 3329 | 4041 | 4877 | 5844 | 6949 | 2757 | 2930 | 3122 | 3332 | | 3559 | 3805 | | | | | | | | | | | | | | | | | | | |
| | | | | | | 43 | 2522 | 3068 | 3715 | 4474 | 5356 | 6366 | 3016 | 3196 | 3396 | 3615 | | 3853 | 4111 | | | | | | | | | | | | | | | | | | | |
| UP-SE2017GS-EAE00 | 5S3EOS6C3FI | CP: 400V-3ph-50Hz Fan: 230V-1ph-50Hz | 6,3 | SE2017GS-O | 303EO1201AA | 25 | 3803 | 4628 | 5612 | 6766 | 8097 | 9610 | 2581 | 2760 | 2959 | 3178 | | 3418 | 3680 | SEPR | 1,95 | 1277 | 538 | 1005 | 107 | 36 | 67 | 1 | 500 | 5195 | 220 | 230/1/50 | 1,34 | 6 | 22 | 12 | 7/8 | 1/2 |
| | | | | | | 32 | 3483 | 4246 | 5148 | 6201 | 7412 | 8785 | 2878 | 3074 | 3291 | 3530 | | 3791 | 4075 | | | | | | | | | | | | | | | | | | | |
| | | | | | | 38 | 3192 | 3888 | 4706 | 5660 | 6758 | 8003 | 3181 | 3390 | 3621 | 3876 | | 4154 | 4456 | | | | | | | | | | | | | | | | | | | |
| | | | | | | 43 | 2950 | 3577 | 4316 | 5179 | 6174 | 7306 | 3488 | 3705 | 3947 | 4213 | | 4504 | 4821 | | | | | | | | | | | | | | | | | | | |
| UP-SE2020GS-EAE00 | 5S3FOS6C3FI | CP: 400V-3ph-50Hz Fan: 230V-1ph-50Hz | 6,9 | SE2020GS-O | 303FO1201AA | 25 | 4403 | 5350 | 6473 | 7782 | 9282 | 10973 | 3012 | 3232 | 3477 | 3749 | | 4049 | 4378 | SEPR | 1,93 | 1277 | 538 | 1005 | 107 | 36 | 67 | 1 | 500 | 5195 | 220 | 230/1/50 | 1,34 | 6 | 22 | 12 | 7/8 | 1/2 |
| | | | | | | 32 | 4023 | 4894 | 5917 | 7104 | 8458 | 9982 | 3364 | 3604 | 3871 | 4167 | | 4492 | 4848 | | | | | | | | | | | | | | | | | | | |
| | | | | | | 38 | 3681 | 4470 | 5393 | 6461 | 7680 | 9052 | 3729 | 3984 | 4268 | 4583 | | 4929 | 5307 | | | | | | | | | | | | | | | | | | | |
| | | | | | | 43 | 3399 | 4105 | 4933 | 5892 | 6989 | 8228 | 4102 | 4367 | 4663 | 4992 | | 5353 | 5749 | | | | | | | | | | | | | | | | | | | |

**Note:** *Subject to modification without prior notification.*

GENERAL DATA & PERFORMANCE

# R452A - LBP - SH10K

| CONDENSING UNITS | | | | COMPRESSORS | | AMBIENT TEMP. | EN13125 - SUBCOOLING 0K - MIDPOINT COOLING CAPACITY (W) | | | | | | POWER INPUT (W) | | | | | | ECO DESIGN | | DIMENSIONS (mm) | | | WEIGHT | ACOUSTICS dB (A) | | CONDENSER/FAN | | | | | | LIQUID RECEIVER | CONNECTION DIAMETERS | | | |
|---|---|---|---|---|---|---|---|---|---|---|---|---|---|---|---|---|---|---|---|---|---|---|---|---|---|---|---|---|---|---|---|---|---|---|---|---|
| CONDENSING UNITS MODELS | CONDENSING UNIT BOM | VOLTAGE SUPPLY (V) | I NOM (A) | COMPRESSOR MODELS | COMPRESSOR BOM | (°C) | -35°C | -30°C | -25°C | -20°C | -15°C | -10°C | -35°C | -30°C | -25°C | -20°C | | -15°C | -10°C | Type | Cop/ Seer | W (width) | D (depth) | H (height) | Net (kg) | Sound Press. @10m | Sound power level | Number of fan | Fan diameter (mm) | Airflow ($m^3/h$) | Fan power (W) | Voltage supply (V) | Internal volume ($dm^3$) | $dm^3$ | Suction (mm) | Liquid (mm) | Suction (") | Liquid (") |
| UP-NT2180GK-EAE00 | 503HAS6C4FI | CP: 230V-1ph-50Hz Fan: 230V-1ph-50Hz | 2,4 | NT2180GK-A-CSR | 923HA0404AF | 25 | 571 | 732 | 932 | 1168 | 1435 | 1730 | 556 | 611 | 674 | 749 | | 837 | 942 | - | - | 982 | 484 | 600 | 69 | 29 | 60 | 1 | 350 | 1695 | 67 | 230/1/50 | 0,23 | 1,6 | 12 | 6 | 1/2 | 1/4 |
| | | | | | | 32 | 487 | 634 | 812 | 1019 | 1252 | 1507 | 552 | 623 | 700 | 785 | | 880 | 987 | | | | | | | | | | | | | | | | | | | |
| | | | | | | 38 | 412 | 546 | 705 | 887 | 1090 | 1313 | 557 | 638 | 722 | 811 | | 907 | 1012 | | | | | | | | | | | | | | | | | | | |
| | | | | | | 43 | - | 474 | 616 | 777 | 956 | 1151 | - | 648 | 735 | 824 | | 919 | 1019 | | | | | | | | | | | | | | | | | | | |
| UP-NT2192GK-EAE00 | 503EAS6C4FI | CP: 230V-1ph-50Hz Fan: 230V-1ph-50Hz | 2,7 | NT2192GK-A-CSR | 923EA0404AF | 25 | 615 | 787 | 992 | 1229 | 1499 | 1799 | 580 | 651 | 725 | 807 | | 900 | 1012 | - | - | 982 | 484 | 600 | 69 | 29 | 60 | 1 | 350 | 1695 | 67 | 230/1/50 | 0,23 | 1,6 | 12 | 8 | 1/2 | 3/8 |
| | | | | | | 32 | 522 | 677 | 859 | 1070 | 1309 | 1574 | 584 | 664 | 748 | 839 | | 943 | 1063 | | | | | | | | | | | | | | | | | | | |
| | | | | | | 38 | 441 | 580 | 743 | 931 | 1143 | 1379 | 586 | 674 | 765 | 864 | | 975 | 1103 | | | | | | | | | | | | | | | | | | | |
| | | | | | | 43 | - | 503 | 649 | 816 | 1006 | 1217 | - | 679 | 776 | 881 | | 998 | 1132 | | | | | | | | | | | | | | | | | | | |
| UP-NT2212GK-EAE00 | 505DAS6C4FI | CP: 230V-1ph-50Hz Fan: 230V-1ph-50Hz | 3,7 | NT2212GK-A-CSR | 925DA0204AF | 25 | 814 | 1038 | 1314 | 1643 | 2023 | 2451 | 708 | 793 | 889 | 998 | | 1121 | 1260 | - | - | 982 | 484 | 600 | 69 | 29 | 60 | 1 | 350 | 1523 | 67 | 230/1/50 | 0,45 | 2,3 | 16 | 8 | 1/2 | 3/8 |
| | | | | | | 32 | 693 | 899 | 1149 | 1445 | 1785 | 2165 | 711 | 811 | 921 | 1043 | | 1176 | 1323 | | | | | | | | | | | | | | | | | | | |
| | | | | | | 38 | 589 | 777 | 1003 | 1269 | 1572 | 1912 | 718 | 830 | 950 | 1079 | | 1219 | 1370 | | | | | | | | | | | | | | | | | | | |
| | | | | | | 43 | - | 677 | 882 | 1121 | 1394 | 1699 | - | 844 | 970 | 1105 | | 1249 | 1403 | | | | | | | | | | | | | | | | | | | |
| UP-NJX2219GS-EAE00 | 545ASS6C3FI | CP: 400V-3ph-50Hz Fan: 230V-1ph-50Hz | 2,3 | NJX2219GS-M | 945AS2101AA | 25 | 1118 | 1478 | 1922 | 2442 | 3030 | 3677 | 994 | 1128 | 1277 | 1441 | | 1623 | 1821 | - | - | 1082 | 490 | 708 | 88 | 34 | 65 | 1 | 400 | 2673 | 120 | 230/1/50 | 0,71 | 3,9 | 16 | 8 | 1/2 | 3/8 |
| | | | | | | 32 | 1016 | 1338 | 1730 | 2189 | 2706 | 3274 | 1031 | 1175 | 1334 | 1508 | | 1699 | 1908 | | | | | | | | | | | | | | | | | | | |
| | | | | | | 38 | 896 | 1186 | 1537 | 1945 | 2405 | 2908 | 1052 | 1207 | 1377 | 1562 | | 1764 | 1984 | | | | | | | | | | | | | | | | | | | |
| | | | | | | 43 | 783 | 1047 | 1365 | 1733 | 2146 | 2597 | 1060 | 1227 | 1408 | 1604 | | 1817 | 2048 | | | | | | | | | | | | | | | | | | | |
| UP-SE2006GK-EAE00 | 5S3ACS6C4FI | CP: 230V-1ph-50Hz Fan: 230V-1ph-50Hz | 5,6 | SE2006GK-C | 303AC1204AA | 25 | 1316 | 1621 | 1991 | 2435 | 2959 | 3567 | 1115 | 1180 | 1253 | 1333 | | 1421 | 1518 | - | - | 1082 | 490 | 708 | 92 | 33 | 64 | 1 | 400 | 2673 | 120 | 230/1/50 | 0,71 | 3,9 | 18 | 10 | 3/4 | 3/8 |
| | | | | | | 32 | 1178 | 1460 | 1801 | 2208 | 2688 | 3245 | 1219 | 1294 | 1377 | 1469 | | 1570 | 1679 | | | | | | | | | | | | | | | | | | | |
| | | | | | | 38 | 1054 | 1311 | 1621 | 1992 | 2430 | 2940 | 1341 | 1422 | 1512 | 1610 | | 1718 | 1836 | | | | | | | | | | | | | | | | | | | |
| | | | | | | 43 | 950 | 1181 | 1462 | 1799 | 2200 | 2667 | 1466 | 1549 | 1641 | 1744 | | 1856 | 1977 | | | | | | | | | | | | | | | | | | | |
| UP-SE2006GS-EAE00 | 5S3AOS6C3FI | CP: 400V-3ph-50Hz Fan: 230V-1ph-50Hz | 2,4 | SE2006GS-O | 303AO1201AA | 25 | 1317 | 1621 | 1992 | 2436 | 2959 | 3568 | 1106 | 1171 | 1243 | 1322 | | 1410 | 1505 | - | - | 1082 | 490 | 708 | 92 | 33 | 64 | 1 | 400 | 2673 | 120 | 230/1/50 | 0,71 | 3,9 | 18 | 10 | 3/4 | 3/8 |
| | | | | | | 32 | 1178 | 1460 | 1801 | 2209 | 2689 | 3247 | 1209 | 1284 | 1366 | 1457 | | 1557 | 1665 | | | | | | | | | | | | | | | | | | | |
| | | | | | | 38 | 1055 | 1312 | 1622 | 1993 | 2432 | 2942 | 1330 | 1410 | 1499 | 1597 | | 1704 | 1820 | | | | | | | | | | | | | | | | | | | |
| | | | | | | 43 | 950 | 1182 | 1463 | 1801 | 2201 | 2669 | 1453 | 1536 | 1628 | 1729 | | 1840 | 1961 | | | | | | | | | | | | | | | | | | | |
| UP-SE2008GK-EAE00 | 5S3BCS6C4FI | CP: 230V-1ph-50Hz Fan: 230V-1ph-50Hz | 7,2 | SE2008GK-C | 303BC1204AA | 25 | 1650 | 2030 | 2488 | 3033 | 3671 | 4407 | 1415 | 1505 | 1606 | 1719 | | 1845 | 1986 | - | - | 1082 | 490 | 708 | 92 | 33 | 64 | 1 | 400 | 2673 | 120 | 230/1/50 | 0,71 | 3,9 | 18 | 10 | 3/4 | 3/8 |
| | | | | | | 32 | 1472 | 1821 | 2239 | 2735 | 3316 | 3984 | 1557 | 1660 | 1776 | 1904 | | 2045 | 2201 | | | | | | | | | | | | | | | | | | | |
| | | | | | | 38 | 1314 | 1628 | 2006 | 2455 | 2980 | 3586 | 1722 | 1832 | 1955 | 2092 | | 2242 | 2407 | | | | | | | | | | | | | | | | | | | |
| | | | | | | 43 | 1179 | 1461 | 1800 | 2205 | 2681 | 3233 | 1888 | 2001 | 2128 | 2268 | | 2423 | 2592 | | | | | | | | | | | | | | | | | | | |
| UP-SE2008GS-EAE00 | 5S3BOS6C3FI | CP: 400V-3ph-50Hz Fan: 230V-1ph-50Hz | 2,7 | SE2008GS-O | 303BO1201AA | 25 | 1652 | 2031 | 2490 | 3036 | 3675 | 4411 | 1388 | 1476 | 1575 | 1686 | | 1809 | 1946 | - | - | 1082 | 490 | 708 | 92 | 33 | 64 | 1 | 400 | 2673 | 120 | 230/1/50 | 0,71 | 3,9 | 18 | 10 | 3/4 | 3/8 |
| | | | | | | 32 | 1474 | 1822 | 2241 | 2738 | 3320 | 3989 | 1527 | 1628 | 1741 | 1866 | | 2004 | 2157 | | | | | | | | | | | | | | | | | | | |
| | | | | | | 38 | 1315 | 1630 | 2009 | 2458 | 2985 | 3592 | 1688 | 1796 | 1916 | 2050 | | 2197 | 2358 | | | | | | | | | | | | | | | | | | | |
| | | | | | | 43 | 1181 | 1463 | 1803 | 2209 | 2686 | 3240 | 1851 | 1961 | 2085 | 2222 | | 2374 | 2539 | | | | | | | | | | | | | | | | | | | |
| UP-SE2010GK-EAE00 | 5S3CCS6C4FI | CP: 230V-1ph-50Hz Fan: 230V-1ph-50Hz | 8,4 | SE2010GK-C | 303CC1204AA | 25 | 1911 | 2346 | 2871 | 3491 | 4212 | 5037 | 1650 | 1761 | 1886 | 2028 | | 2188 | 2367 | - | - | 1082 | 490 | 708 | 92 | 33 | 64 | 1 | 400 | 2673 | 120 | 230/1/50 | 0,71 | 3,9 | 18 | 10 | 3/4 | 3/8 |
| | | | | | | 32 | 1700 | 2098 | 2574 | 3135 | 3786 | 4530 | 1825 | 1951 | 2093 | 2252 | | 2429 | 2625 | | | | | | | | | | | | | | | | | | | |
| | | | | | | 38 | 1513 | 1870 | 2297 | 2800 | 3386 | 4057 | 2024 | 2158 | 2309 | 2478 | | 2664 | 2869 | | | | | | | | | | | | | | | | | | | |
| | | | | | | 43 | 1355 | 1673 | 2053 | 2504 | 3031 | 3638 | 2224 | 2361 | 2516 | 2688 | | 2878 | 3087 | | | | | | | | | | | | | | | | | | | |
| UP-SE2010GS-EAE00 | 5S3COS6C3FI | CP: 400V-3ph-50Hz Fan: 230V-1ph-50Hz | 4,3 | SE2010GS-O | 303CO1201AA | 25 | 1913 | 2349 | 2874 | 3495 | 4217 | 5044 | 1613 | 1722 | 1844 | 1982 | | 2138 | 2312 | - | - | 1082 | 490 | 708 | 92 | 33 | 64 | 1 | 400 | 2673 | 120 | 230/1/50 | 0,71 | 3,9 | 18 | 10 | 3/4 | 3/8 |
| | | | | | | 32 | 1703 | 2101 | 2578 | 3140 | 3792 | 4538 | 1783 | 1906 | 2045 | 2200 | | 2372 | 2563 | | | | | | | | | | | | | | | | | | | |
| | | | | | | 38 | 1516 | 1874 | 2302 | 2806 | 3394 | 4067 | 1977 | 2108 | 2256 | 2420 | | 2602 | 2801 | | | | | | | | | | | | | | | | | | | |
| | | | | | | 43 | 1358 | 1677 | 2058 | 2511 | 3040 | 3650 | 2172 | 2305 | 2456 | 2624 | | 2810 | 3014 | | | | | | | | | | | | | | | | | | | |
| UP-SE2012GS-EAE00 | 5S3GOS6C3FI | CP: 400V-3ph-50Hz Fan: 230V-1ph-50Hz | 5,4 | SE2012GS-O | 303GO1201AA | 25 | 2562 | 3155 | 3876 | 4739 | 5758 | 6942 | 2105 | 2229 | 2366 | 2518 | | 2685 | 2868 | - | - | 1277 | 538 | 1005 | 107 | 36 | 67 | 1 | 500 | 5195 | 220 | 230/1/50 | 1,34 | 6 | 22 | 12 | 7/8 | 1/2 |
| | | | | | | 32 | 2293 | 2842 | 3505 | 4298 | 5233 | 6318 | 2302 | 2444 | 2602 | 2775 | | 2966 | 3173 | | | | | | | | | | | | | | | | | | | |
| | | | | | | 38 | 2052 | 2553 | 3157 | 3880 | 4733 | 5726 | 2533 | 2686 | 2855 | 3042 | | 3247 | 3469 | | | | | | | | | | | | | | | | | | | |
| | | | | | | 43 | 1849 | 2301 | 2848 | 3505 | 4285 | 5197 | 2768 | 2925 | 3101 | 3295 | | 3507 | 3737 | | | | | | | | | | | | | | | | | | | |
| UP-SE2014GS-EAE00 | 5S3DOS6C3FI | CP: 400V-3ph-50Hz Fan: 230V-1ph-50Hz | 5,2 | SE2014GS-O | 303DO1201AA | 25 | 2965 | 3649 | 4477 | 5466 | 6627 | 7971 | 2238 | 2375 | 2528 | 2697 | | 2885 | 3094 | - | - | 1277 | 538 | 1005 | 107 | 36 | 67 | 1 | 500 | 5195 | 220 | 230/1/50 | 1,34 | 6 | 22 | 12 | 7/8 | 1/2 |
| | | | | | | 32 | 2651 | 3282 | 4042 | 4947 | 6009 | 7237 | 2453 | 2610 | 2784 | 2977 | | 3190 | 3423 | | | | | | | | | | | | | | | | | | | |
| | | | | | | 38 | 2372 | 2945 | 3635 | 4457 | 5424 | 6544 | 2703 | 2871 | 3058 | 3264 | | 3492 | 3740 | | | | | | | | | | | | | | | | | | | |
| | | | | | | 43 | 2135 | 2651 | 3275 | 4021 | 4902 | 5927 | 2956 | 3128 | 3321 | 3535 | | 3769 | 4025 | | | | | | | | | | | | | | | | | | | |
| UP-SE2017GS-EAE00 | 5S3EOS6C3FI | CP: 400V-3ph-50Hz Fan: 230V-1ph-50Hz | 6,3 | SE2017GS-O | 303EO1201AA | 25 | 3475 | 4270 | 5230 | 6371 | 7704 | 9235 | 2562 | 2727 | 2913 | 3121 | | 3354 | 3615 | - | - | 1277 | 538 | 1005 | 107 | 36 | 67 | 1 | 500 | 5195 | 220 | 230/1/50 | 1,34 | 6 | 22 | 12 | 7/8 | 1/2 |
| | | | | | | 32 | 3101 | 3832 | 4709 | 5748 | 6959 | 8350 | 2819 | 3007 | 3218 | 3453 | | 3714 | 4002 | | | | | | | | | | | | | | | | | | | |
| | | | | | | 38 | 2769 | 3430 | 4223 | 5161 | 6258 | 7521 | 3115 | 3316 | 3541 | 3791 | | 4067 | 4370 | | | | | | | | | | | | | | | | | | | |
| | | | | | | 43 | 2489 | 3081 | 3793 | 4640 | 5635 | 6786 | 3412 | 3618 | 3849 | 4106 | | 4390 | 4700 | | | | | | | | | | | | | | | | | | | |
| UP-SE2020GS-EAE00 | 5S3FOS6C3FI | CP: 400V-3ph-50Hz Fan: 230V-1ph-50Hz | 6,9 | SE2020GS-O | 303FO1201AA | 25 | 4012 | 4923 | 6018 | 7311 | 8811 | 10521 | 2977 | 3179 | 3409 | 3670 | | 3963 | 4294 | - | - | 1277 | 538 | 1005 | 107 | 36 | 67 | 1 | 500 | 5195 | 220 | 230/1/50 | 1,34 | 6 | 22 | 12 | 7/8 | 1/2 |
| | | | | | | 32 | 3573 | 4406 | 5399 | 6569 | 7923 | 9467 | 3290 | 3520 | 3779 | 4070 | | 4394 | 4754 | | | | | | | | | | | | | | | | | | | |
| | | | | | | 38 | 3183 | 3932 | 4824 | 5874 | 7094 | 8487 | 3645 | 3890 | 4165 | 4472 | | 4813 | 5188 | | | | | | | | | | | | | | | | | | | |
| | | | | | | 43 | 2854 | 3521 | 4318 | 5260 | 6359 | 7621 | 4000 | 4250 | 4531 | 4845 | | 5193 | 5574 | | | | | | | | | | | | | | | | | | | |

**Note:** *Subject to modification without prior notification.*

GENERAL DATA & PERFORMANCE

# R449A - LBP - RTG20

| CONDENSING UNITS | | | | COMPRESSORS | | AMBIENT TEMP. | EN13125 - SUBCOOLING 0K - MIDPOINT COOLING CAPACITY (W) | | | | | | POWER INPUT (W) | | | | | | ECO DESIGN | | DIMENSIONS (mm) | | | WEIGHT | ACOUSTICS dB (A) | | CONDENSER/FAN | | | | | | LIQUID RECEIVER | CONNECTION DIAMETERS | | | |
|---|---|---|---|---|---|---|---|---|---|---|---|---|---|---|---|---|---|---|---|---|---|---|---|---|---|---|---|---|---|---|---|---|---|---|---|---|---|
| CONDENSING UNITS MODELS | CONDENSING UNIT BOM | VOLTAGE SUPPLY (V) | I NOM (A) | COMPRESSOR MODELS | COMPRESSOR BOM | (°C) | -35°C | -30°C | -25°C | -20°C | -15°C | -10°C | -35°C | -30°C | -25°C | -20°C | | -15°C | -10°C | Type | Cop/ Seer | W (width) | D (depth) | H (height) | Net (kg) | Sound Press. @10m | Sound power level | Number of fan | Fan diameter (mm) | Airflow ($m^3/h$) | Fan power (W) | Voltage supply (V) | Internal volume ($dm^3$) | $dm^3$ | Suction (mm) | Liquid (mm) | Suction (") | Liquid (") |
| **UP-SE2006GK-EAE00** | 5S3ACS6C4FI | CP: 230V-1ph-50Hz Fan: 230V-1ph-50Hz | 5,6 | **SE2006GK-C** | 303AC1204AA | 25 | 1341 | 1689 | 2087 | 2543 | 3064 | 3656 | 1062 | 1131 | 1206 | 1286 | | 1372 | 1463 | COP | 1,06 | 1082 | 490 | 708 | 92 | 33 | 64 | 1 | 400 | 2673 | 120 | 230/1/50 | 0,71 | 3,9 | 18 | 10 | 3/4 | 3/8 |
| | | | | | | 32 | 1270 | 1575 | 1931 | 2343 | 2820 | 3366 | 1185 | 1259 | 1341 | 1431 | | 1527 | 1629 | | | | | | | | | | | | | | | | | | |
| | | | | | | 38 | 1195 | 1469 | 1790 | 2168 | 2609 | 3120 | 1323 | 1401 | 1488 | 1585 | | 1690 | 1804 | | | | | | | | | | | | | | | | | | |
| | | | | | | 43 | 1125 | 1373 | 1669 | 2020 | 2434 | 2917 | 1469 | 1550 | 1643 | 1745 | | 1858 | 1981 | | | | | | | | | | | | | | | | | | |
| **UP-SE2006GS-EAE00** | 5S3AOS6C3FI | CP: 400V-3ph-50Hz Fan: 230V-1ph-50Hz | 2,4 | **SE2006GS-O** | 303AO1201AA | 25 | 1341 | 1689 | 2087 | 2544 | 3065 | 3657 | 1054 | 1122 | 1196 | 1276 | | 1361 | 1451 | COP | 1,06 | 1082 | 490 | 708 | 92 | 33 | 64 | 1 | 400 | 2673 | 120 | 230/1/50 | 0,71 | 3,9 | 18 | 10 | 3/4 | 3/8 |
| | | | | | | 32 | 1270 | 1576 | 1931 | 2344 | 2820 | 3367 | 1176 | 1249 | 1331 | 1419 | | 1514 | 1615 | | | | | | | | | | | | | | | | | | |
| | | | | | | 38 | 1196 | 1469 | 1791 | 2169 | 2610 | 3121 | 1312 | 1389 | 1476 | 1572 | | 1676 | 1788 | | | | | | | | | | | | | | | | | | |
| | | | | | | 43 | 1125 | 1374 | 1670 | 2021 | 2435 | 2918 | 1457 | 1537 | 1629 | 1731 | | 1842 | 1964 | | | | | | | | | | | | | | | | | | |
| **UP-SE2008GK-EAE00** | 5S3BCS6C4FI | CP: 230V-1ph-50Hz Fan: 230V-1ph-50Hz | 7,2 | **SE2008GK-C** | 303BC1204AA | 25 | 1698 | 2128 | 2618 | 3177 | 3812 | 4530 | 1352 | 1446 | 1550 | 1663 | | 1785 | 1916 | COP | 1,04 | 1082 | 490 | 708 | 92 | 33 | 64 | 1 | 400 | 2673 | 120 | 230/1/50 | 0,71 | 3,9 | 18 | 10 | 3/4 | 3/8 |
| | | | | | | 32 | 1603 | 1980 | 2417 | 2921 | 3501 | 4165 | 1519 | 1620 | 1734 | 1859 | | 1996 | 2144 | | | | | | | | | | | | | | | | | | |
| | | | | | | 38 | 1504 | 1841 | 2235 | 2696 | 3233 | 3853 | 1706 | 1814 | 1936 | 2072 | | 2223 | 2388 | | | | | | | | | | | | | | | | | | |
| | | | | | | 43 | 1411 | 1716 | 2077 | 2506 | 3008 | 3593 | 1907 | 2020 | 2150 | 2296 | | 2459 | 2639 | | | | | | | | | | | | | | | | | | |
| **UP-SE2008GS-EAE00** | 5S3BOS6C3FI | CP: 400V-3ph-50Hz Fan: 230V-1ph-50Hz | 2,7 | **SE2008GS-O** | 303BO1201AA | 25 | 1698 | 2129 | 2620 | 3179 | 3815 | 4534 | 1327 | 1419 | 1520 | 1631 | | 1750 | 1878 | COP | 1,06 | 1082 | 490 | 708 | 92 | 33 | 64 | 1 | 400 | 2673 | 120 | 230/1/50 | 0,71 | 3,9 | 18 | 10 | 3/4 | 3/8 |
| | | | | | | 32 | 1604 | 1981 | 2418 | 2923 | 3504 | 4169 | 1489 | 1589 | 1700 | 1822 | | 1956 | 2101 | | | | | | | | | | | | | | | | | | |
| | | | | | | 38 | 1506 | 1842 | 2237 | 2699 | 3237 | 3857 | 1672 | 1777 | 1897 | 2030 | | 2177 | 2339 | | | | | | | | | | | | | | | | | | |
| | | | | | | 43 | 1412 | 1717 | 2080 | 2509 | 3012 | 3598 | 1869 | 1979 | 2106 | 2248 | | 2407 | 2584 | | | | | | | | | | | | | | | | | | |
| **UP-SE2010GK-EAE00** | 5S3CCS6C4FI | CP: 230V-1ph-50Hz Fan: 230V-1ph-50Hz | 8,4 | **SE2010GK-C** | 303CC1204AA | 25 | 1981 | 2473 | 3032 | 3667 | 4386 | 5196 | 1581 | 1697 | 1825 | 1966 | | 2120 | 2288 | COP | 1,03 | 1082 | 490 | 708 | 92 | 33 | 64 | 1 | 400 | 2673 | 120 | 230/1/50 | 0,71 | 3,9 | 18 | 10 | 3/4 | 3/8 |
| | | | | | | 32 | 1865 | 2296 | 2793 | 3365 | 4022 | 4770 | 1783 | 1908 | 2049 | 2206 | | 2379 | 2570 | | | | | | | | | | | | | | | | | | |
| | | | | | | 38 | 1746 | 2129 | 2577 | 3100 | 3707 | 4405 | 2013 | 2146 | 2299 | 2470 | | 2662 | 2876 | | | | | | | | | | | | | | | | | | |
| | | | | | | 43 | 1633 | 1979 | 2390 | 2874 | 3442 | 4100 | 2262 | 2402 | 2565 | 2749 | | 2958 | 3193 | | | | | | | | | | | | | | | | | | |
| **UP-SE2010GS-EAE00** | 5S3COS6C3FI | CP: 400V-3ph-50Hz Fan: 230V-1ph-50Hz | 4,3 | **SE2010GS-O** | 303CO1201AA | 25 | 1982 | 2475 | 3035 | 3670 | 4390 | 5201 | 1546 | 1659 | 1784 | 1921 | | 2071 | 2235 | COP | 1,06 | 1082 | 490 | 708 | 92 | 33 | 64 | 1 | 400 | 2673 | 120 | 230/1/50 | 0,71 | 3,9 | 18 | 10 | 3/4 | 3/8 |
| | | | | | | 32 | 1867 | 2298 | 2796 | 3369 | 4027 | 4776 | 1743 | 1865 | 2002 | 2155 | | 2323 | 2509 | | | | | | | | | | | | | | | | | | |
| | | | | | | 38 | 1748 | 2132 | 2581 | 3105 | 3713 | 4412 | 1966 | 2096 | 2245 | 2412 | | 2598 | 2806 | | | | | | | | | | | | | | | | | | |
| | | | | | | 43 | 1635 | 1982 | 2394 | 2880 | 3448 | 4108 | 2208 | 2344 | 2503 | 2682 | | 2886 | 3114 | | | | | | | | | | | | | | | | | | |
| **UP-SE2012GS-EAE00** | 5S3GOS6C3FI | CP: 400V-3ph-50Hz Fan: 230V-1ph-50Hz | 5,4 | **SE2012GS-O** | 303GO1201AA | 25 | 2609 | 3286 | 4063 | 4951 | 5966 | 7119 | 2004 | 2134 | 2276 | 2428 | | 2590 | 2761 | SEPR | 1,64 | 1277 | 538 | 1005 | 107 | 36 | 67 | 1 | 500 | 5195 | 220 | 230/1/50 | 1,34 | 6 | 22 | 12 | 7/8 | 1/2 |
| | | | | | | 32 | 2471 | 3067 | 3759 | 4563 | 5491 | 6556 | 2237 | 2377 | 2532 | 2701 | | 2882 | 3075 | | | | | | | | | | | | | | | | | | |
| | | | | | | 38 | 2327 | 2860 | 3487 | 4223 | 5083 | 6078 | 2496 | 2644 | 2810 | 2992 | | 3191 | 3405 | | | | | | | | | | | | | | | | | | |
| | | | | | | 43 | 2190 | 2674 | 3251 | 3935 | 4741 | 5683 | 2773 | 2926 | 3100 | 3294 | | 3508 | 3740 | | | | | | | | | | | | | | | | | | |
| **UP-SE2014GS-EAE00** | 5S3DOS6C3FI | CP: 400V-3ph-50Hz Fan: 230V-1ph-50Hz | 5,2 | **SE2014GS-O** | 303DO1201AA | 25 | 3033 | 3811 | 4701 | 5717 | 6873 | 8183 | 2135 | 2278 | 2435 | 2605 | | 2787 | 2981 | SEPR | 1,68 | 1277 | 538 | 1005 | 107 | 36 | 67 | 1 | 500 | 5195 | 220 | 230/1/50 | 1,34 | 6 | 22 | 12 | 7/8 | 1/2 |
| | | | | | | 32 | 2869 | 3553 | 4347 | 5265 | 6323 | 7535 | 2388 | 2542 | 2713 | 2901 | | 3105 | 3324 | | | | | | | | | | | | | | | | | | |
| | | | | | | 38 | 2699 | 3311 | 4029 | 4870 | 5850 | 6983 | 2669 | 2832 | 3016 | 3220 | | 3443 | 3686 | | | | | | | | | | | | | | | | | | |
| | | | | | | 43 | 2538 | 3093 | 3753 | 4535 | 5455 | 6526 | 2970 | 3140 | 3334 | 3551 | | 3791 | 4055 | | | | | | | | | | | | | | | | | | |
| **UP-SE2017GS-EAE00** | 5S3EOS6C3FI | CP: 400V-3ph-50Hz Fan: 230V-1ph-50Hz | 6,3 | **SE2017GS-O** | 303EO1201AA | 25 | 3577 | 4481 | 5509 | 6679 | 8006 | 9504 | 2449 | 2622 | 2812 | 3020 | | 3245 | 3488 | SEPR | 1,73 | 1277 | 538 | 1005 | 107 | 36 | 67 | 1 | 500 | 5195 | 220 | 230/1/50 | 1,34 | 6 | 22 | 12 | 7/8 | 1/2 |
| | | | | | | 32 | 3378 | 4171 | 5087 | 6144 | 7358 | 8744 | 2749 | 2935 | 3143 | 3373 | | 3625 | 3899 | | | | | | | | | | | | | | | | | | |
| | | | | | | 38 | 3172 | 3879 | 4707 | 5675 | 6799 | 8095 | 3085 | 3282 | 3506 | 3757 | | 4034 | 4339 | | | | | | | | | | | | | | | | | | |
| | | | | | | 43 | 2976 | 3618 | 4378 | 5277 | 6331 | 7556 | 3446 | 3652 | 3889 | 4157 | | 4457 | 4790 | | | | | | | | | | | | | | | | | | |
| **UP-SE2020GS-EAE00** | 5S3FOS6C3FI | CP: 400V-3ph-50Hz Fan: 230V-1ph-50Hz | 6,9 | **SE2020GS-O** | 303FO1201AA | 25 | 4162 | 5194 | 6362 | 7687 | 9184 | 10869 | 2854 | 3064 | 3299 | 3557 | | 3840 | 4150 | SEPR | 1,73 | 1277 | 538 | 1005 | 107 | 36 | 67 | 1 | 500 | 5195 | 220 | 230/1/50 | 1,34 | 6 | 22 | 12 | 7/8 | 1/2 |
| | | | | | | 32 | 3921 | 4824 | 5864 | 7060 | 8429 | 9987 | 3215 | 3443 | 3701 | 3987 | | 4305 | 4656 | | | | | | | | | | | | | | | | | | |
| | | | | | | 38 | 3673 | 4476 | 5415 | 6509 | 7776 | 9232 | 3625 | 3868 | 4146 | 4460 | | 4811 | 5204 | | | | | | | | | | | | | | | | | | |
| | | | | | | 43 | 3437 | 4165 | 5026 | 6041 | 7228 | 8603 | 4067 | 4323 | 4619 | 4956 | | 5338 | 5769 | | | | | | | | | | | | | | | | | | |

**Note:** *Subject to modification without prior notification.*

GENERAL DATA & PERFORMANCE

# R449A - LBP - SH10K

| CONDENSING UNITS | | | | COMPRESSORS | | AMBIENT TEMP. | EN13125 - SUBCOOLING 0K - MIDPOINT COOLING CAPACITY (W) | | | | | | POWER INPUT (W) | | | | | | ECO DESIGN | | DIMENSIONS (mm) | | | WEIGHT | ACOUSTICS dB (A) | | CONDENSER/FAN | | | | | | LIQUID RECEIVER | CONNECTION DIAMETERS | | | |
|---|---|---|---|---|---|---|---|---|---|---|---|---|---|---|---|---|---|---|---|---|---|---|---|---|---|---|---|---|---|---|---|---|---|---|---|---|
| CONDENSING UNITS MODELS | CONDENSING UNIT BOM | VOLTAGE SUPPLY (V) | I NOM (A) | COMPRESSOR MODELS | COMPRESSOR BOM | (°C) | -35°C | -30°C | -25°C | -20°C | -15°C | -10°C | -35°C | -30°C | -25°C | -20°C | | -15°C | -10°C | Type | Cop/ Seer | W (width) | D (depth) | H (height) | Net (kg) | Sound Press. @10m | Sound power level | Number of fan | Fan diameter (mm) | Airflow ($m^3/h$) | Fan power (W) | Voltage supply (V) | Internal volume ($dm^3$) | $dm^3$ | Suction (mm) | Liquid (mm) | Suction (") | Liquid (") |
| **UP-SE2006GK-EAE00** | 5S3ACS6C4FI | CP: 230V-1ph-50Hz<br>Fan: 230V-1ph-50Hz | 5,6 | **SE2006GK-C** | 303AC1204AA | 25 | 1286 | 1632 | 2030 | 2488 | 3013 | 3611 | 1068 | 1132 | 1203 | 1280 | | 1363 | 1452 | - | - | 1082 | 490 | 708 | 92 | 33 | 64 | 1 | 400 | 2673 | 120 | 230/1/50 | 0,71 | 3,9 | 18 | 10 | 3/4 | 3/8 |
| | | | | | | 32 | 1212 | 1512 | 1864 | 2274 | 2750 | 3300 | 1178 | 1249 | 1329 | 1417 | | 1512 | 1615 | | | | | | | | | | | | | | | | | | | |
| | | | | | | 38 | 1121 | 1387 | 1703 | 2078 | 2518 | 3031 | 1315 | 1390 | 1476 | 1571 | | 1675 | 1789 | | | | | | | | | | | | | | | | | | | |
| | | | | | | 43 | 1034 | 1275 | 1566 | 1913 | 2327 | 2813 | 1461 | 1538 | 1627 | 1728 | | 1839 | 1960 | | | | | | | | | | | | | | | | | | | |
| **UP-SE2006GS-EAE00** | 5S3AOS6C3FI | CP: 400V-3ph-50Hz<br>Fan: 230V-1ph-50Hz | 2,4 | **SE2006GS-O** | 303AO1201AA | 25 | 1286 | 1632 | 2030 | 2488 | 3013 | 3612 | 1060 | 1124 | 1194 | 1270 | | 1352 | 1441 | - | - | 1082 | 490 | 708 | 92 | 33 | 64 | 1 | 400 | 2673 | 120 | 230/1/50 | 0,71 | 3,9 | 18 | 10 | 3/4 | 3/8 |
| | | | | | | 32 | 1213 | 1513 | 1864 | 2275 | 2751 | 3301 | 1168 | 1239 | 1318 | 1405 | | 1500 | 1602 | | | | | | | | | | | | | | | | | | | |
| | | | | | | 38 | 1121 | 1387 | 1704 | 2078 | 2519 | 3032 | 1304 | 1379 | 1463 | 1558 | | 1661 | 1774 | | | | | | | | | | | | | | | | | | | |
| | | | | | | 43 | 1035 | 1276 | 1566 | 1914 | 2328 | 2814 | 1449 | 1526 | 1614 | 1713 | | 1823 | 1943 | | | | | | | | | | | | | | | | | | | |
| **UP-SE2008GK-EAE00** | 5S3BCS6C4FI | CP: 400V-3ph-50Hz<br>Fan: 230V-1ph-50Hz | 7,2 | **SE2008GK-C** | 303BC1204AA | 25 | 1630 | 2057 | 2546 | 3105 | 3743 | 4467 | 1355 | 1443 | 1541 | 1650 | | 1769 | 1899 | - | - | 1082 | 490 | 708 | 92 | 33 | 64 | 1 | 400 | 2673 | 120 | 230/1/50 | 0,71 | 3,9 | 18 | 10 | 3/4 | 3/8 |
| | | | | | | 32 | 1527 | 1896 | 2326 | 2826 | 3405 | 4070 | 1507 | 1605 | 1716 | 1839 | | 1976 | 2125 | | | | | | | | | | | | | | | | | | | |
| | | | | | | 38 | 1405 | 1731 | 2118 | 2574 | 3110 | 3732 | 1694 | 1798 | 1917 | 2051 | | 2200 | 2364 | | | | | | | | | | | | | | | | | | | |
| | | | | | | 43 | 1292 | 1587 | 1942 | 2367 | 2870 | 3461 | 1893 | 2000 | 2124 | 2265 | | 2423 | 2599 | | | | | | | | | | | | | | | | | | | |
| **UP-SE2008GS-EAE00** | 5S3BOS6C3FI | CP: 400V-3ph-50Hz<br>Fan: 230V-1ph-50Hz | 2,7 | **SE2008GS-O** | 303BO1201AA | 25 | 1631 | 2058 | 2548 | 3107 | 3746 | 4470 | 1329 | 1415 | 1512 | 1618 | | 1734 | 1861 | - | - | 1082 | 490 | 708 | 92 | 33 | 64 | 1 | 400 | 2673 | 120 | 230/1/50 | 0,71 | 3,9 | 18 | 10 | 3/4 | 3/8 |
| | | | | | | 32 | 1528 | 1897 | 2328 | 2829 | 3408 | 4075 | 1478 | 1574 | 1682 | 1803 | | 1936 | 2082 | | | | | | | | | | | | | | | | | | | |
| | | | | | | 38 | 1406 | 1733 | 2120 | 2577 | 3113 | 3737 | 1661 | 1762 | 1879 | 2009 | | 2155 | 2315 | | | | | | | | | | | | | | | | | | | |
| | | | | | | 43 | 1293 | 1590 | 1945 | 2370 | 2874 | 3466 | 1855 | 1959 | 2081 | 2218 | | 2373 | 2545 | | | | | | | | | | | | | | | | | | | |
| **UP-SE2010GK-EAE00** | 5S3CCS6C4FI | CP: 230V-1ph-50Hz<br>Fan: 230V-1ph-50Hz | 8,4 | **SE2010GK-C** | 303CC1204AA | 25 | 1903 | 2391 | 2946 | 3580 | 4300 | 5114 | 1580 | 1688 | 1810 | 1946 | | 2098 | 2265 | - | - | 1082 | 490 | 708 | 92 | 33 | 64 | 1 | 400 | 2673 | 120 | 230/1/50 | 0,71 | 3,9 | 18 | 10 | 3/4 | 3/8 |
| | | | | | | 32 | 1773 | 2193 | 2681 | 3248 | 3901 | 4650 | 1769 | 1889 | 2027 | 2181 | | 2354 | 2545 | | | | | | | | | | | | | | | | | | | |
| | | | | | | 38 | 1625 | 1997 | 2435 | 2952 | 3557 | 4259 | 1998 | 2126 | 2274 | 2441 | | 2629 | 2839 | | | | | | | | | | | | | | | | | | | |
| | | | | | | 43 | 1491 | 1827 | 2230 | 2711 | 3281 | 3949 | 2241 | 2373 | 2527 | 2704 | | 2904 | 3129 | | | | | | | | | | | | | | | | | | | |
| **UP-SE2010GS-EAE00** | 5S3COS6C3FI | CP: 400V-3ph-50Hz<br>Fan: 230V-1ph-50Hz | 4,3 | **SE2010GS-O** | 303CO1201AA | 25 | 1904 | 2392 | 2949 | 3584 | 4305 | 5120 | 1545 | 1651 | 1770 | 1903 | | 2050 | 2213 | - | - | 1082 | 490 | 708 | 92 | 33 | 64 | 1 | 400 | 2673 | 120 | 230/1/50 | 0,71 | 3,9 | 18 | 10 | 3/4 | 3/8 |
| | | | | | | 32 | 1774 | 2196 | 2685 | 3252 | 3907 | 4657 | 1729 | 1846 | 1980 | 2131 | | 2299 | 2485 | | | | | | | | | | | | | | | | | | | |
| | | | | | | 38 | 1627 | 1999 | 2439 | 2957 | 3563 | 4266 | 1951 | 2076 | 2220 | 2383 | | 2566 | 2771 | | | | | | | | | | | | | | | | | | | |
| | | | | | | 43 | 1494 | 1830 | 2234 | 2716 | 3287 | 3957 | 2188 | 2316 | 2467 | 2639 | | 2833 | 3052 | | | | | | | | | | | | | | | | | | | |
| **UP-SE2012GS-EAE00** | 5S3GOS6C3FI | CP: 400V-3ph-50Hz<br>Fan: 230V-1ph-50Hz | 5,4 | **SE2012GS-O** | 303GO1201AA | 25 | 2502 | 3176 | 3951 | 4843 | 5866 | 7032 | 2016 | 2138 | 2272 | 2417 | | 2574 | 2742 | - | - | 1277 | 538 | 1005 | 107 | 36 | 67 | 1 | 500 | 5195 | 220 | 230/1/50 | 1,34 | 6 | 22 | 12 | 7/8 | 1/2 |
| | | | | | | 32 | 2360 | 2944 | 3629 | 4428 | 5357 | 6428 | 2223 | 2358 | 2509 | 2675 | | 2855 | 3050 | | | | | | | | | | | | | | | | | | | |
| | | | | | | 38 | 2182 | 2701 | 3317 | 4047 | 4905 | 5906 | 2481 | 2624 | 2785 | 2965 | | 3163 | 3377 | | | | | | | | | | | | | | | | | | | |
| | | | | | | 43 | 2014 | 2484 | 3050 | 3728 | 4534 | 5482 | 2757 | 2904 | 3072 | 3261 | | 3470 | 3700 | | | | | | | | | | | | | | | | | | | |
| **UP-SE2014GS-EAE00** | 5S3DOS6C3FI | CP: 400V-3ph-50Hz<br>Fan: 230V-1ph-50Hz | 5,2 | **SE2014GS-O** | 303DO1201AA | 25 | 2911 | 3684 | 4572 | 5591 | 6754 | 8077 | 2144 | 2277 | 2426 | 2589 | | 2765 | 2957 | - | - | 1277 | 538 | 1005 | 107 | 36 | 67 | 1 | 500 | 5195 | 220 | 230/1/50 | 1,34 | 6 | 22 | 12 | 7/8 | 1/2 |
| | | | | | | 32 | 2737 | 3408 | 4191 | 5103 | 6161 | 7377 | 2371 | 2520 | 2687 | 2872 | | 3074 | 3295 | | | | | | | | | | | | | | | | | | | |
| | | | | | | 38 | 2528 | 3122 | 3827 | 4660 | 5638 | 6776 | 2652 | 2809 | 2988 | 3189 | | 3410 | 3653 | | | | | | | | | | | | | | | | | | | |
| | | | | | | 43 | 2331 | 2870 | 3517 | 4292 | 5211 | 6291 | 2951 | 3113 | 3299 | 3510 | | 3745 | 4004 | | | | | | | | | | | | | | | | | | | |
| **UP-SE2017GS-EAE00** | 5S3EOS6C3FI | CP: 400V-3ph-50Hz<br>Fan: 230V-1ph-50Hz | 6,3 | **SE2017GS-O** | 303EO1201AA | 25 | 3436 | 4332 | 5357 | 6527 | 7859 | 9368 | 2453 | 2614 | 2794 | 2994 | | 3214 | 3456 | - | - | 1277 | 538 | 1005 | 107 | 36 | 67 | 1 | 500 | 5195 | 220 | 230/1/50 | 1,34 | 6 | 22 | 12 | 7/8 | 1/2 |
| | | | | | | 32 | 3217 | 3993 | 4895 | 5943 | 7153 | 8543 | 2728 | 2907 | 3110 | 3337 | | 3588 | 3864 | | | | | | | | | | | | | | | | | | | |
| | | | | | | 38 | 2962 | 3649 | 4461 | 5418 | 6538 | 7840 | 3063 | 3253 | 3471 | 3716 | | 3990 | 4293 | | | | | | | | | | | | | | | | | | | |
| | | | | | | 43 | 2727 | 3349 | 4095 | 4986 | 6041 | 7279 | 3419 | 3615 | 3842 | 4100 | | 4390 | 4714 | | | | | | | | | | | | | | | | | | | |
| **UP-SE2020GS-EAE00** | 5S3FOS6C3FI | CP: 400V-3ph-50Hz<br>Fan: 230V-1ph-50Hz | 6,9 | **SE2020GS-O** | 303FO1201AA | 25 | 3999 | 5020 | 6182 | 7504 | 9002 | 10694 | 2850 | 3047 | 3271 | 3521 | | 3799 | 4108 | - | - | 1277 | 538 | 1005 | 107 | 36 | 67 | 1 | 500 | 5195 | 220 | 230/1/50 | 1,34 | 6 | 22 | 12 | 7/8 | 1/2 |
| | | | | | | 32 | 3726 | 4607 | 5629 | 6812 | 8174 | 9734 | 3188 | 3408 | 3659 | 3942 | | 4258 | 4610 | | | | | | | | | | | | | | | | | | | |
| | | | | | | 38 | 3419 | 4198 | 5117 | 6199 | 7462 | 8925 | 3597 | 3830 | 4099 | 4405 | | 4750 | 5135 | | | | | | | | | | | | | | | | | | | |
| | | | | | | 43 | 3140 | 3846 | 4692 | 5699 | 6891 | 8287 | 4028 | 4269 | 4550 | 4872 | | 5238 | 5650 | | | | | | | | | | | | | | | | | | | |

**Note:** *Subject to modification without prior notification.*

GENERAL DATA & PERFORMANCE

# R134a -MBP - RTG20

| CONDENSING UNITS | | | | COMPRESSORS | | AMBIENT TEMP. | EN13125 - SUBCOOLING 0K - MIDPOINT | | | | | | | POWER INPUT (W) | | | | | | | | ECO DESIGN | | DIMENSIONS (MM) | | | WEIGHT | ACOUSTICS dB (A) | | CONDENSER/FAN | | | | | | LIQUID RECEIVER | CONNECTION DIAMETERS | | | |
|---|---|---|---|---|---|---|---|---|---|---|---|---|---|---|---|---|---|---|---|---|---|---|---|---|---|---|---|---|---|---|---|---|---|---|---|---|---|---|---|---|
| | | | | | | | COOLING CAPACITY (W) | | | | | | | | | | | | | | | | | | | | | | | | | | | | | | | | | |
| CONDENSING UNITS MODELS | CONDENSING UNIT BOM | VOLTAGE SUPPLY (V) | I NOM (A) | COMPRESSOR MODELS | COMPRESSOR BOM | (°C) | -20°C | -15°C | -10°C | -5°C | 0°C | +5°C | +10°C | -20°C | -15°C | -10°C | -5°C | | 0°C | +5°C | +10°C | Type | Cop/ Seer | W (width) | D (depth) | H (height) | Net (kg) | Sound Press. @10m | Sound power level | Number of fan | Fan diameter (mm) | Airflow ($m^3/h$) | Fan power (W) | Voltage supply (V) | Internal volume ($dm^3$) | $dm^3$ | Suction (mm) | Liquid (mm) | Suction (") | Liquid (") |
| **UP-NEU6214Z-EA00** | 668NAS6C4FI | CP: 230V-1ph-50Hz Fan: 230V-1ph-50Hz | 2,9 | **NEU6214Z-A-CSR** | 269NA5190AF | 25 | - | 770 | 957 | 1181 | 1440 | 1728 | 2040 | - | 439 | 478 | 524 | | 578 | 639 | 706 | COP | 1,79 | 982 | 484 | 600 | 67 | 28 | 59 | 1 | 350 | 1695 | 67 | 230/1/50 | 0,23 | 1,6 | 10 | 6 | 3/8 | 1/4 |
| | | | | | | 32 | - | 716 | 893 | 1102 | 1342 | 1608 | 1895 | - | 457 | 499 | 549 | | 605 | 668 | 738 | | | | | | | | | | | | | | | | | | | |
| | | | | | | 38 | - | 667 | 833 | 1029 | 1252 | 1497 | 1762 | - | 471 | 517 | 570 | | 630 | 696 | 768 | | | | | | | | | | | | | | | | | | | |
| | | | | | | 43 | - | - | 779 | 963 | 1171 | 1400 | 1645 | - | - | 531 | 588 | | 651 | 720 | 796 | | | | | | | | | | | | | | | | | | | |
| **UP-NJ6220ZZ-EA00** | 644HAS6C4FI | CP: 230V-1ph-50Hz Fan: 230V-1ph-50Hz | 6,2 | **NJ6220Z-A-CSIR** | 144CA1104AF | 25 | - | 1062 | 1337 | 1635 | 1963 | 2324 | 2723 | - | 673 | 735 | 795 | | 861 | 939 | 1037 | COP | 1,6 | 982 | 484 | 600 | 69 | 29 | 60 | 1 | 350 | 1695 | 67 | 230/1/51 | 0,23 | 1,6 | 12 | 6 | 1/2 | 1/4 |
| | | | | | | 32 | - | 925 | 1182 | 1457 | 1760 | 2093 | 2462 | - | 666 | 741 | 814 | | 892 | 982 | 1093 | | | | | | | | | | | | | | | | | | | |
| | | | | | | 38 | - | - | 1053 | 1310 | 1590 | 1899 | 2240 | - | - | 745 | 829 | | 918 | 1020 | 1142 | | | | | | | | | | | | | | | | | | | |
| | | | | | | 43 | - | - | 950 | 1190 | 1451 | 1739 | 2058 | - | - | 749 | 842 | | 940 | 1051 | 1182 | | | | | | | | | | | | | | | | | | | |
| **UP-NJ6226Z-EA00** | 642HAS6C4FI | CP: 230V-1ph-50Hz Fan: 230V-1ph-50Hz | 5,6 | **NJ6226Z-A-CSR** | 142HA1404AF | 25 | - | 1402 | 1718 | 2059 | 2425 | 2817 | 3235 | - | 768 | 860 | 957 | | 1062 | 1182 | 1322 | COP | 1,72 | 982 | 484 | 600 | 69 | 29 | 60 | 1 | 350 | 1695 | 67 | 230/1/52 | 0,23 | 1,6 | 12 | 6 | 1/2 | 1/4 |
| | | | | | | 32 | - | 1223 | 1519 | 1836 | 2175 | 2538 | 2924 | - | 784 | 885 | 990 | | 1104 | 1232 | 1381 | | | | | | | | | | | | | | | | | | | |
| | | | | | | 38 | - | - | 1353 | 1649 | 1965 | 2302 | 2660 | - | - | 898 | 1012 | | 1134 | 1272 | 1429 | | | | | | | | | | | | | | | | | | | |
| | | | | | | 43 | - | - | - | 1497 | 1794 | - | - | - | - | - | 1024 | | 1156 | - | - | | | | | | | | | | | | | | | | | | | |
| **UP-NJ6226ZX-EA00** | 546EMS6C3FI | CP: 400V-3ph-50Hz Fan: 230V-1ph-50Hz | 2,2 | **NJ6226ZX-M** | 148IM1101AA | 25 | - | 1626 | 1892 | 2212 | 2572 | 2959 | 3355 | - | 734 | 813 | 903 | | 1004 | 1117 | 1242 | COP | 1,98 | 982 | 484 | 600 | 69 | 29 | 60 | 1 | 350 | 1695 | 67 | 230/1/53 | 0,23 | 1,6 | 12 | 6 | 1/2 | 1/4 |
| | | | | | | 32 | - | 1386 | 1647 | 1951 | 2286 | 2638 | 2991 | - | 738 | 831 | 935 | | 1049 | 1174 | 1310 | | | | | | | | | | | | | | | | | | | |
| | | | | | | 38 | - | - | 1435 | 1726 | 2038 | 2360 | 2677 | - | - | 847 | 963 | | 1089 | 1224 | 1369 | | | | | | | | | | | | | | | | | | | |
| | | | | | | 43 | - | - | - | 1536 | 1830 | - | - | - | - | - | 986 | | 1122 | - | - | | | | | | | | | | | | | | | | | | | |
| **UP-SE6015GK-EAE00** | 6S1ACS6C4FI | CP: 230V-1ph-50Hz Fan: 230V-1ph-50Hz | 5,3 | **SE6015GK-C** | 301AC1104AA | 25 | 1564 | 1941 | 2413 | 2972 | 3612 | 4325 | 5102 | 941 | 990 | 1050 | 1116 | | 1186 | 1259 | 1331 | COP | 1,97 | 1082 | 490 | 708 | 92 | 33 | 64 | 1 | 400 | 2673 | 120 | 230/1/50 | 0,71 | 3,9 | 18 | 12 | 3/4 | 1/2 |
| | | | | | | 32 | 1437 | 1796 | 2245 | 2777 | 3385 | 4060 | 4795 | 1015 | 1073 | 1142 | 1218 | | 1298 | 1381 | 1464 | | | | | | | | | | | | | | | | | | | |
| | | | | | | 38 | 1331 | 1668 | 2092 | 2595 | 3171 | 3809 | 4504 | 1084 | 1150 | 1226 | 1310 | | 1400 | 1491 | 1583 | | | | | | | | | | | | | | | | | | | |
| | | | | | | 43 | 1248 | 1563 | 1962 | 2438 | 2982 | 3588 | 4246 | 1149 | 1220 | 1303 | 1394 | | 1490 | 1589 | 1688 | | | | | | | | | | | | | | | | | | | |
| **UP-SE6015GS-EAE00** | 6S1AOS6C3FI | CP: 400V-3ph-50Hz Fan: 230V-1ph-50Hz | 2,3 | **SE6015GS-O** | 301AO1101AA | 25 | 1564 | 1942 | 2413 | 2973 | 3613 | 4326 | 5104 | 926 | 975 | 1033 | 1098 | | 1167 | 1239 | 1309 | COP | 2,00 | 1082 | 490 | 708 | 92 | 33 | 64 | 1 | 400 | 2673 | 120 | 230/1/50 | 0,71 | 3,9 | 18 | 12 | 3/4 | 1/2 |
| | | | | | | 32 | 1438 | 1797 | 2246 | 2778 | 3386 | 4062 | 4797 | 999 | 1056 | 1124 | 1198 | | 1277 | 1359 | 1440 | | | | | | | | | | | | | | | | | | | |
| | | | | | | 38 | 1331 | 1669 | 2093 | 2597 | 3172 | 3811 | 4506 | 1067 | 1132 | 1207 | 1289 | | 1377 | 1467 | 1557 | | | | | | | | | | | | | | | | | | | |
| | | | | | | 43 | 1249 | 1564 | 1963 | 2439 | 2984 | 3590 | 4249 | 1130 | 1201 | 1282 | 1371 | | 1466 | 1563 | 1660 | | | | | | | | | | | | | | | | | | | |
| **UP-SE6018GK-EAE00** | 6S1BCS6C4FI | CP: 230V-1ph-50Hz Fan: 230V-1ph-50Hz | 6,2 | **SE6018GK-C** | 301BC1104AA | 25 | 1865 | 2315 | 2877 | 3543 | 4305 | 5153 | 6077 | 1079 | 1137 | 1206 | 1284 | | 1368 | 1454 | 1539 | COP | 2,04 | 1082 | 490 | 708 | 92 | 33 | 64 | 1 | 400 | 2545 | 120 | 230/1/50 | 0,91 | 3,9 | 18 | 12 | 3/4 | 1/2 |
| | | | | | | 32 | 1714 | 2142 | 2677 | 3310 | 4033 | 4836 | 5709 | 1165 | 1234 | 1314 | 1403 | | 1498 | 1596 | 1694 | | | | | | | | | | | | | | | | | | | |
| | | | | | | 38 | 1587 | 1989 | 2494 | 3093 | 3777 | 4537 | 5362 | 1246 | 1323 | 1413 | 1511 | | 1616 | 1724 | 1833 | | | | | | | | | | | | | | | | | | | |
| | | | | | | 43 | 1488 | 1863 | 2339 | 2905 | 3553 | 4273 | 5054 | 1321 | 1405 | 1502 | 1609 | | 1722 | 1839 | 1956 | | | | | | | | | | | | | | | | | | | |
| **UP-SE6018GS-EAE00** | 6S1BOS6C3FI | CP: 400V-3ph-50Hz Fan: 230V-1ph-50Hz | 3,7 | **SE6018GS-O** | 301BO1101AA | 25 | 1867 | 2317 | 2879 | 3546 | 4309 | 5158 | 6083 | 1031 | 1086 | 1152 | 1226 | | 1305 | 1386 | 1467 | COP | 2,14 | 1082 | 490 | 708 | 92 | 33 | 64 | 1 | 400 | 2545 | 120 | 230/1/50 | 0,91 | 3,9 | 18 | 12 | 3/4 | 1/2 |
| | | | | | | 32 | 1716 | 2144 | 2680 | 3314 | 4038 | 4842 | 5717 | 1113 | 1178 | 1254 | 1339 | | 1429 | 1522 | 1614 | | | | | | | | | | | | | | | | | | | |
| | | | | | | 38 | 1589 | 1991 | 2497 | 3098 | 3783 | 4544 | 5371 | 1190 | 1263 | 1348 | 1441 | | 1541 | 1643 | 1746 | | | | | | | | | | | | | | | | | | | |
| | | | | | | 43 | 1490 | 1866 | 2342 | 2910 | 3559 | 4281 | 5064 | 1261 | 1341 | 1433 | 1534 | | 1641 | 1752 | 1862 | | | | | | | | | | | | | | | | | | | |
| **UP-SE6021GK-EAE00** | 6S1CCS6C4FI | CP: 230V-1ph-50Hz Fan: 230V-1ph-50Hz | 6,9 | **SE6021GK-C** | 301CC1104AA | 25 | 2108 | 2615 | 3247 | 3995 | 4848 | 5794 | 6820 | 1196 | 1264 | 1345 | 1437 | | 1536 | 1639 | 1743 | COP | 2,06 | 1082 | 490 | 708 | 92 | 33 | 64 | 1 | 400 | 2545 | 120 | 230/1/50 | 0,91 | 3,9 | 18 | 12 | 3/4 | 1/2 |
| | | | | | | 32 | 1936 | 2417 | 3018 | 3727 | 4534 | 5426 | 6393 | 1292 | 1372 | 1465 | 1569 | | 1681 | 1798 | 1915 | | | | | | | | | | | | | | | | | | | |
| | | | | | | 38 | 1793 | 2244 | 2809 | 3479 | 4240 | 5082 | 5993 | 1383 | 1472 | 1576 | 1691 | | 1814 | 1942 | 2071 | | | | | | | | | | | | | | | | | | | |
| | | | | | | 43 | 1682 | 2102 | 2634 | 3265 | 3984 | 4780 | 5641 | 1468 | 1565 | 1677 | 1801 | | 1933 | 2071 | 2209 | | | | | | | | | | | | | | | | | | | |
| **UP-SE6021GS-EAE00** | 6S1COS6C3FI | CP: 400V-3ph-50Hz Fan: 230V-1ph-50Hz | 3,8 | **SE6021GS-O** | 301CO1101AA | 25 | 2111 | 2618 | 3251 | 4000 | 4854 | 5801 | 6829 | 1138 | 1202 | 1279 | 1365 | | 1459 | 1556 | 1654 | COP | 2,17 | 1082 | 490 | 708 | 92 | 33 | 64 | 1 | 400 | 2545 | 120 | 230/1/50 | 0,91 | 3,9 | 18 | 12 | 3/4 | 1/2 |
| | | | | | | 32 | 1939 | 2421 | 3022 | 3732 | 4541 | 5435 | 6404 | 1229 | 1304 | 1392 | 1491 | | 1596 | 1706 | 1817 | | | | | | | | | | | | | | | | | | | |
| | | | | | | 38 | 1796 | 2247 | 2814 | 3485 | 4248 | 5092 | 6005 | 1315 | 1399 | 1497 | 1605 | | 1721 | 1842 | 1964 | | | | | | | | | | | | | | | | | | | |
| | | | | | | 43 | 1685 | 2106 | 2639 | 3272 | 3993 | 4792 | 5655 | 1395 | 1486 | 1592 | 1709 | | 1834 | 1963 | 2094 | | | | | | | | | | | | | | | | | | | |
| **UP-SE6026GS-EAE00** | 6S1GOS6C3FI | CP: 400V-3ph-50Hz Fan: 230V-1ph-50Hz | 5 | **SE6026GS-O** | 301GO1101AA | 25 | 2705 | 3358 | 4177 | 5150 | 6267 | 7515 | 8882 | 1483 | 1557 | 1643 | 1740 | | 1841 | 1945 | 2045 | COP | 2,18 | 1277 | 538 | 1005 | 107 | 36 | 67 | 1 | 500 | 5195 | 220 | 230/1/50 | 1,34 | 6 | 22 | 16 | 7/8 | 5/8 |
| | | | | | | 32 | 2488 | 3112 | 3895 | 4824 | 5888 | 7076 | 8373 | 1598 | 1685 | 1786 | 1897 | | 2014 | 2134 | 2250 | | | | | | | | | | | | | | | | | | | |
| | | | | | | 38 | 2304 | 2893 | 3634 | 4516 | 5527 | 6654 | 7886 | 1704 | 1802 | 1916 | 2040 | | 2170 | 2303 | 2433 | | | | | | | | | | | | | | | | | | | |
| | | | | | | 43 | 2161 | 2711 | 3411 | 4247 | 5208 | 6280 | 7450 | 1803 | 1910 | 2033 | 2167 | | 2308 | 2452 | 2594 | | | | | | | | | | | | | | | | | | | |
| **UP-SE6030GS-EAE00** | 6S1DOS6C3FI | CP: 400V-3ph-50Hz Fan: 230V-1ph-50Hz | 5,4 | **SE6030GS-O** | 301DO1101AA | 25 | 3051 | 3787 | 4707 | 5800 | 7050 | 8445 | 9967 | 1614 | 1697 | 1796 | 1907 | | 2025 | 2146 | 2265 | COP | 2,25 | 1277 | 538 | 1005 | 107 | 36 | 67 | 1 | 500 | 5195 | 220 | 230/1/50 | 1,34 | 6 | 22 | 16 | 7/8 | 5/8 |
| | | | | | | 32 | 2805 | 3507 | 4385 | 5425 | 6615 | 7937 | 9378 | 1739 | 1838 | 1953 | 2080 | | 2215 | 2353 | 2490 | | | | | | | | | | | | | | | | | | | |
| | | | | | | 38 | 2598 | 3258 | 4088 | 5075 | 6202 | 7455 | 8820 | 1857 | 1967 | 2096 | 2236 | | 2386 | 2539 | 2691 | | | | | | | | | | | | | | | | | | | |
| | | | | | | 43 | 2437 | 3054 | 3837 | 4770 | 5839 | 7029 | 8324 | 1965 | 2086 | 2225 | 2377 | | 2539 | 2704 | 2869 | | | | | | | | | | | | | | | | | | | |
| **UP-SE6036GS-EAE00** | 6S1EOS6C3FI | CP: 400V-3ph-50Hz Fan: 230V-1ph-50Hz | 5,7 | **SE6036GS-O** | 301EO1101AA | 25 | 3756 | 4662 | 5796 | 7143 | 8686 | 10408 | 12289 | 1894 | 1993 | 2111 | 2242 | | 2381 | 2524 | 2664 | SEPR | 3,21 | 1277 | 538 | 1005 | 107 | 36 | 67 | 1 | 500 | 4739 | 220 | 230/1/50 | 2,23 | 6 | 22 | 16 | 7/8 | 5/8 |
| | | | | | | 32 | 3454 | 4319 | 5401 | 6686 | 8154 | 9789 | 11572 | 2045 | 2162 | 2299 | 2450 | | 2609 | 2773 | 2934 | | | | | | | | | | | | | | | | | | | |
| | | | | | | 38 | 3199 | 4014 | 5038 | 6256 | 7649 | 9200 | 10889 | 2186 | 2318 | 2470 | 2638 | | 2815 | 2996 | 3176 | | | | | | | | | | | | | | | | | | | |
| | | | | | | 43 | 3001 | 3762 | 4729 | 5882 | 7204 | 8677 | 10282 | 2316 | 2460 | 2626 | 2807 | | 2998 | 3194 | 3389 | | | | | | | | | | | | | | | | | | | |
| **UP-SE6043GS-EAE00** | 6S1FOS6C3FI | CP: 400V-3ph-50Hz Fan: 230V-1ph-50Hz | 6,4 | **SE6043GS-O** | 301FO1101AA | 25 | 4421 | 5485 | 6813 | 8386 | 10181 | 12175 | 14344 | 2230 | 2354 | 2503 | 2671 | | 2851 | 3038 | 3225 | SEPR | 3,18 | 1277 | 538 | 1005 | 107 | 36 | 67 | 1 | 500 | 4739 | 220 | 230/1/50 | 2,23 | 6 | 22 | 16 | 7/8 | 5/8 |
| | | | | | | 32 | 4063 | 5075 | 6338 | 7832 | 9534 | 11420 | 13467 | 2410 | 2556 | 2727 | 2918 | | 3123 | 3334 | 3547 | | | | | | | | | | | | | | | | | | | |
| | | | | | | 38 | 3763 | 4713 | 5905 | 7318 | 8927 | 10710 | 12643 | 2579 | 2743 | 2933 | 3144 | | 3369 | 3602 | 3836 | | | | | | | | | | | | | | | | | | | |
| | | | | | | 43 | 3531 | 4417 | 5539 | 6874 | 8397 | 10086 | 11916 | 2736 | 2915 | 3121 | 3348 | | 3590 | 3840 | 4093 | | | | | | | | | | | | | | | | | | | |

**Note:** *Subject to modification without prior notification.*

GENERAL DATA & PERFORMANCE

# R134a -MBP - SH10K

| CONDENSING UNITS | | | | COMPRESSORS | | AMBIENT TEMP. | EN13125 - SUBCOOLING OK - MIDPOINT COOLING CAPACITY (W) | | | | | | | POWER INPUT (W) | | | | | | | | ECO DESIGN | | DIMENSIONS (MM) | | | WEIGHT | ACOUSTICS dB (A) | | CONDENSER/FAN | | | | | | LIQUID RECEIVER | CONNECTION DIAMETERS | | | |
|---|---|---|---|---|---|---|---|---|---|---|---|---|---|---|---|---|---|---|---|---|---|---|---|---|---|---|---|---|---|---|---|---|---|---|---|---|---|---|---|---|
| CONDENSING UNITS MODELS | CONDENSING UNIT BOM | VOLTAGE SUPPLY (V) | I NOM (A) | COMPRESSOR MODELS | COMPRESSOR BOM | (°C) | -20°C | -15°C | -10°C | -5°C | 0°C | +5°C | +10°C | -20°C | -15°C | -10°C | -5°C | | 0°C | +5°C | +10°C | Type | Cop/ Seer | W (width) | D (depth) | H (height) | Net (kg) | Sound Press. @10m | Sound power level | Number of fan | Fan diameter (mm) | Airflow (m³/h) | Fan power (W) | Voltage supply (V) | Internal volume (dm³) | dm³ | Suction (mm) | Liquid (mm) | Suction (") | Liquid (") |
| **UP-NEU6214Z-EA00** | 668NAS6C4FI | CP: 230V-1ph-50Hz Fan: 230V-1ph-50Hz | 2,9 | **NEU6214Z-A-CSR** | 269NA5190AF | 25 | - | 753 | 940 | 1166 | 1427 | 1721 | 2042 | - | 437 | 476 | 523 | | 577 | 638 | 706 | - | - | 982 | 484 | 600 | 67 | 28 | 59 | 1 | 350 | 1695 | 67 | 230/1/50 | 0,23 | 1,6 | 10 | 6 | 3/8 | 1/4 |
| | | | | | | 32 | - | 696 | 872 | 1083 | 1327 | 1598 | 1895 | - | 455 | 497 | 547 | | 603 | 667 | 738 | | | | | | | | | | | | | | | | | | | |
| | | | | | | 38 | - | 642 | 808 | 1006 | 1233 | 1486 | 1762 | - | 468 | | 567 | | 627 | 694 | 768 | | | | | | | | | | | | | | | | | | | |
| | | | | | | 43 | - | - | 752 | 938 | 1151 | 1388 | 1645 | - | - | 528 | 585 | | 648 | 718 | 796 | | | | | | | | | | | | | | | | | | | |
| **UP-NJ6220ZZ-EA00** | 644HAS6C4FI | CP: 230V-1ph-50Hz Fan: 230V-1ph-50Hz | 6,2 | **NJ6220Z-A-CSIR** | 144CA1104AF | 25 | - | 1036 | 1313 | 1614 | 1946 | 2315 | 2723 | - | 671 | 732 | 792 | | 858 | 936 | 1037 | - | - | 982 | 484 | 600 | 69 | 29 | 60 | 1 | 350 | 1695 | 67 | 230/1/51 | 0,23 | 1,6 | 12 | 6 | 1/2 | 1/4 |
| | | | | | | 32 | - | 900 | 1155 | 1432 | 1738 | 2079 | 2459 | - | 663 | 737 | 810 | | 888 | 980 | 1093 | | | | | | | | | | | | | | | | | | | |
| | | | | | | 38 | - | - | 1021 | 1278 | 1563 | 1882 | 2240 | - | - | 741 | 825 | | 914 | 1017 | 1141 | | | | | | | | | | | | | | | | | | | |
| | | | | | | 43 | - | - | 914 | 1157 | 1425 | 1727 | 2066 | - | - | 745 | 837 | | 936 | 1047 | 1180 | | | | | | | | | | | | | | | | | | | |
| **UP-NJ6226Z-EA00** | 642HAS6C4FI | CP: 230V-1ph-50Hz Fan: 230V-1ph-50Hz | 5,6 | **NJ6226Z-A-CSR** | 142HA1404AF | 25 | - | 1369 | 1687 | 2030 | 2401 | 2802 | 3233 | - | 764 | 855 | 951 | | 1057 | 1179 | 1323 | - | - | 982 | 484 | 600 | 69 | 29 | 60 | 1 | 350 | 1695 | 67 | 230/1/52 | 0,23 | 1,6 | 12 | 6 | 1/2 | 1/4 |
| | | | | | | 32 | - | 1187 | 1481 | 1799 | 2143 | 2517 | 2922 | - | 779 | 880 | 985 | | 1100 | 1230 | 1381 | | | | | | | | | | | | | | | | | | | |
| | | | | | | 38 | - | - | 1308 | 1607 | 1932 | 2285 | 2669 | - | - | 893 | 1007 | | 1129 | 1267 | 1424 | | | | | | | | | | | | | | | | | | | |
| | | | | | | 43 | - | - | - | 1457 | 1766 | - | - | - | - | - | 1018 | | 1147 | - | - | | | | | | | | | | | | | | | | | | | |
| **UP-NJ6226ZX-EA00** | 546EMS6C3FI | CP: 400V-3ph-50Hz Fan: 230V-1ph-50Hz | 2,2 | **NJ6226ZX-M** | 148IM1101AA | 25 | - | 1588 | 1856 | 2180 | 2547 | 2943 | 3354 | - | 731 | 809 | 898 | | 1000 | 1115 | 1243 | - | - | 982 | 484 | 600 | 69 | 29 | 60 | 1 | 350 | 1695 | 67 | 230/1/53 | 0,23 | 1,6 | 12 | 6 | 1/2 | 1/4 |
| | | | | | | 32 | - | 1345 | 1606 | 1913 | 2255 | 2618 | 2991 | - | 734 | 826 | 930 | | 1044 | 1171 | 1310 | | | | | | | | | | | | | | | | | | | |
| | | | | | | 38 | - | - | 1390 | 1684 | 2005 | 2343 | 2684 | - | - | 842 | 957 | | 1083 | 1220 | 1367 | | | | | | | | | | | | | | | | | | | |
| | | | | | | 43 | - | - | - | 1497 | 1802 | - | - | - | - | - | 979 | | 1114 | - | - | | | | | | | | | | | | | | | | | | | |
| **UP-SE6015GK-EAE00** | 6S1ACS6C4FI | CP: 230V-1ph-50Hz Fan: 230V-1ph-50Hz | 5,3 | **SE6015GK-C** | 301AC1104AA | 25 | 1526 | 1903 | 2374 | 2935 | 3582 | 4307 | 5106 | 945 | 992 | 1049 | 1113 | | 1183 | 1256 | 1330 | - | - | 1082 | 490 | 708 | 92 | 33 | 64 | 1 | 400 | 2673 | 120 | 230/1/50 | 0,71 | 3,9 | 18 | 12 | 3/4 | 1/2 |
| | | | | | | 32 | 1386 | 1744 | 2193 | 2729 | 3345 | 4037 | 4797 | 1009 | 1066 | 1134 | 1210 | | 1292 | 1377 | 1464 | | | | | | | | | | | | | | | | | | | |
| | | | | | | 38 | 1271 | 1607 | 2031 | 2539 | 3125 | 3782 | 4504 | 1077 | 1142 | 1218 | 1303 | | 1394 | 1489 | 1585 | | | | | | | | | | | | | | | | | | | |
| | | | | | | 43 | 1183 | 1495 | 1894 | 2375 | 2932 | 3557 | 4245 | 1141 | 1212 | 1295 | 1386 | | 1484 | 1585 | 1688 | | | | | | | | | | | | | | | | | | | |
| **UP-SE6015GS-EAE00** | 6S1AOS6C3FI | CP: 400V-3ph-50Hz Fan: 230V-1ph-50Hz | 2,3 | **SE6015GS-O** | 301AO1101AA | 25 | 1527 | 1903 | 2375 | 2936 | 3583 | 4309 | 5108 | 930 | 977 | 1033 | 1096 | | 1164 | 1236 | 1309 | - | - | 1082 | 490 | 708 | 92 | 33 | 64 | 1 | 400 | 2673 | 120 | 230/1/50 | 0,71 | 3,9 | 18 | 12 | 3/4 | 1/2 |
| | | | | | | 32 | 1387 | 1745 | 2194 | 2730 | 3347 | 4039 | 4799 | 993 | 1050 | 1116 | 1191 | | 1271 | 1355 | 1440 | | | | | | | | | | | | | | | | | | | |
| | | | | | | 38 | 1272 | 1608 | 2032 | 2541 | 3127 | 3784 | 4507 | 1060 | 1124 | 1199 | 1282 | | 1371 | 1464 | 1558 | | | | | | | | | | | | | | | | | | | |
| | | | | | | 43 | 1183 | 1496 | 1896 | 2377 | 2934 | 3559 | 4248 | 1123 | 1193 | 1274 | 1363 | | 1459 | 1559 | 1660 | | | | | | | | | | | | | | | | | | | |
| **UP-SE6018GK-EAE00** | 6S1BCS6C4FI | CP: 230V-1ph-50Hz Fan: 230V-1ph-50Hz | 6,2 | **SE6018GK-C** | 301BC1104AA | 25 | 1820 | 2269 | 2830 | 3499 | 4268 | 5132 | 6082 | 1083 | 1139 | 1206 | 1281 | | 1364 | 1450 | 1538 | - | - | 1082 | 490 | 708 | 92 | 33 | 64 | 1 | 400 | 2545 | 120 | 230/1/50 | 0,91 | 3,9 | 18 | 12 | 3/4 | 1/2 |
| | | | | | | 32 | 1653 | 2079 | 2614 | 3252 | 3986 | 4808 | 5712 | 1158 | 1225 | 1305 | 1394 | | 1491 | 1592 | 1694 | | | | | | | | | | | | | | | | | | | |
| | | | | | | 38 | 1516 | 1916 | 2421 | 3026 | 3723 | 4504 | 5363 | 1237 | 1314 | 1403 | 1503 | | 1610 | 1721 | 1835 | | | | | | | | | | | | | | | | | | | |
| | | | | | | 43 | 1410 | 1782 | 2258 | 2831 | 3492 | 4235 | 5052 | 1313 | 1396 | 1492 | 1600 | | 1714 | 1834 | 1955 | | | | | | | | | | | | | | | | | | | |
| **UP-SE6018GS-EAE00** | 6S1BOS6C3FI | CP: 400V-3ph-50Hz Fan: 230V-1ph-50Hz | 3,7 | **SE6018GS-O** | 301BO1101AA | 25 | 1822 | 2271 | 2833 | 3502 | 4272 | 5137 | 6088 | 1036 | 1088 | 1152 | 1223 | | 1301 | 1383 | 1466 | - | - | 1082 | 490 | 708 | 92 | 33 | 64 | 1 | 400 | 2545 | 120 | 230/1/50 | 0,91 | 3,9 | 18 | 12 | 3/4 | 1/2 |
| | | | | | | 32 | 1655 | 2082 | 2618 | 3256 | 3991 | 4815 | 5719 | 1106 | 1170 | 1246 | 1331 | | 1422 | 1517 | 1614 | | | | | | | | | | | | | | | | | | | |
| | | | | | | 38 | 1518 | 1919 | 2425 | 3031 | 3729 | 4512 | 5372 | 1181 | 1254 | 1339 | 1433 | | 1535 | 1640 | 1748 | | | | | | | | | | | | | | | | | | | |
| | | | | | | 43 | 1412 | 1785 | 2262 | 2836 | 3499 | 4243 | 5062 | 1253 | 1332 | 1423 | 1525 | | 1634 | 1747 | 1862 | | | | | | | | | | | | | | | | | | | |
| **UP-SE6021GK-EAE00** | 6S1CCS6C4FI | CP: 230V-1ph-50Hz Fan: 230V-1ph-50Hz | 6,9 | **SE6021GK-C** | 301CC1104AA | 25 | 2055 | 2561 | 3192 | 3943 | 4804 | 5768 | 6825 | 1199 | 1264 | 1342 | 1432 | | 1530 | 1634 | 1741 | - | - | 1082 | 490 | 708 | 92 | 33 | 64 | 1 | 400 | 2545 | 120 | 230/1/50 | 0,91 | 3,9 | 18 | 12 | 3/4 | 1/2 |
| | | | | | | 32 | 1866 | 2345 | 2946 | 3660 | 4479 | 5394 | 6395 | 1284 | 1362 | 1455 | 1559 | | 1673 | 1793 | 1916 | | | | | | | | | | | | | | | | | | | |
| | | | | | | 38 | 1712 | 2160 | 2726 | 3402 | 4177 | 5044 | 5993 | 1373 | 1461 | 1565 | 1681 | | 1806 | 1938 | 2073 | | | | | | | | | | | | | | | | | | | |
| | | | | | | 43 | 1593 | 2009 | 2541 | 3179 | 3914 | 4737 | 5638 | 1458 | 1554 | 1665 | 1789 | | 1923 | 2063 | 2206 | | | | | | | | | | | | | | | | | | | |
| **UP-SE6021GS-EAE00** | 6S1COS6C3FI | CP: 400V-3ph-50Hz Fan: 230V-1ph-50Hz | 3,8 | **SE6021GS-O** | 301CO1101AA | 25 | 2058 | 2564 | 3196 | 3947 | 4810 | 5775 | 6834 | 1141 | 1202 | 1276 | 1361 | | 1453 | 1551 | 1653 | - | - | 1082 | 490 | 708 | 92 | 33 | 64 | 1 | 400 | 2545 | 120 | 230/1/50 | 0,91 | 3,9 | 18 | 12 | 3/4 | 1/2 |
| | | | | | | 32 | 1869 | 2349 | 2950 | 3665 | 4486 | 5402 | 6406 | 1221 | 1295 | 1382 | 1481 | | 1588 | 1701 | 1818 | | | | | | | | | | | | | | | | | | | |
| | | | | | | 38 | 1715 | 2164 | 2731 | 3408 | 4186 | 5055 | 6005 | 1306 | 1389 | 1486 | 1596 | | 1714 | 1838 | 1965 | | | | | | | | | | | | | | | | | | | |
| | | | | | | 43 | 1596 | 2013 | 2546 | 3186 | 3923 | 4748 | 5652 | 1386 | 1476 | 1581 | 1698 | | 1825 | 1957 | 2092 | | | | | | | | | | | | | | | | | | | |
| **UP-SE6026GS-EAE00** | 6S1GOS6C3FI | CP: 400V-3ph-50Hz Fan: 230V-1ph-50Hz | 5 | **SE6026GS-O** | 301GO1101AA | 25 | 2644 | 3296 | 4115 | 5092 | 6219 | 7489 | 8892 | 1493 | 1563 | 1647 | 1740 | | 1839 | 1942 | 2045 | - | - | 1277 | 538 | 1005 | 107 | 36 | 67 | 1 | 500 | 5195 | 220 | 230/1/50 | 1,34 | 6 | 22 | 16 | 7/8 | 5/8 |
| | | | | | | 32 | 2402 | 3025 | 3808 | 4743 | 5823 | 7037 | 8378 | 1590 | 1675 | 1775 | 1887 | | 2005 | 2127 | 2250 | | | | | | | | | | | | | | | | | | | |
| | | | | | | 38 | 2204 | 2790 | 3532 | 4422 | 5451 | 6609 | 7888 | 1693 | 1790 | 1903 | 2028 | | 2161 | 2298 | 2436 | | | | | | | | | | | | | | | | | | | |
| | | | | | | 43 | 2050 | 2596 | 3297 | 4142 | 5122 | 6228 | 7450 | 1792 | 1898 | 2021 | 2156 | | 2299 | 2448 | 2596 | | | | | | | | | | | | | | | | | | | |
| **UP-SE6030GS-EAE00** | 6S1DOS6C3FI | CP: 400V-3ph-50Hz Fan: 230V-1ph-50Hz | 5,4 | **SE6030GS-O** | 301DO1101AA | 25 | 2980 | 3714 | 4634 | 5730 | 6993 | 8412 | 9976 | 1622 | 1702 | 1797 | 1904 | | 2020 | 2142 | 2264 | - | - | 1277 | 538 | 1005 | 107 | 36 | 67 | 1 | 500 | 5195 | 220 | 230/1/50 | 1,34 | 6 | 22 | 16 | 7/8 | 5/8 |
| | | | | | | 32 | 2707 | 3406 | 4285 | 5332 | 6539 | 7893 | 9383 | 1730 | 1826 | 1940 | 2067 | | 2204 | 2346 | 2490 | | | | | | | | | | | | | | | | | | | |
| | | | | | | 38 | 2484 | 3141 | 3972 | 4967 | 6114 | 7403 | 8821 | 1844 | 1954 | 2082 | 2224 | | 2376 | 2534 | 2694 | | | | | | | | | | | | | | | | | | | |
| | | | | | | 43 | 2311 | 2923 | 3706 | 4650 | 5741 | 6969 | 8322 | 1953 | 2073 | 2211 | 2364 | | 2528 | 2698 | 2870 | | | | | | | | | | | | | | | | | | | |
| **UP-SE6036GS-EAE00** | 6S1EOS6C3FI | CP: 400V-3ph-50Hz Fan: 230V-1ph-50Hz | 5,7 | **SE6036GS-O** | 301EO1101AA | 25 | 3669 | 4574 | 5707 | 7059 | 8617 | 10369 | 12302 | 1905 | 2000 | 2113 | 2240 | | 2377 | 2519 | 2663 | - | - | 1277 | 538 | 1005 | 107 | 36 | 67 | 1 | 500 | 4739 | 220 | 230/1/50 | 2,23 | 6 | 22 | 16 | 7/8 | 5/8 |
| | | | | | | 32 | 3334 | 4196 | 5279 | 6572 | 8062 | 9735 | 11578 | 2034 | 2149 | 2284 | 2435 | | 2597 | 2765 | 2934 | | | | | | | | | | | | | | | | | | | |
| | | | | | | 38 | 3059 | 3869 | 4895 | 6124 | 7542 | 9136 | 10892 | 2171 | 2302 | 2454 | 2623 | | 2803 | 2991 | 3179 | | | | | | | | | | | | | | | | | | | |
| | | | | | | 43 | 2846 | 3602 | 4569 | 5735 | 7084 | 8604 | 10280 | 2302 | 2444 | 2609 | 2791 | | 2986 | 3187 | 3390 | | | | | | | | | | | | | | | | | | | |
| **UP-SE6043GS-EAE00** | 6S1FOS6C3FI | CP: 400V-3ph-50Hz Fan: 230V-1ph-50Hz | 6,4 | **SE6043GS-O** | 301FO1101AA | 25 | 4313 | 5374 | 6700 | 8278 | 10092 | 12124 | 14355 | 2238 | 2357 | 2500 | 2663 | | 2841 | 3029 | 3223 | - | - | 1277 | 538 | 1005 | 107 | 36 | 67 | 1 | 500 | 4739 | 220 | 230/1/50 | 2,23 | 6 | 22 | 16 | 7/8 | 5/8 |
| | | | | | | 32 | 3918 | 4926 | 6189 | 7693 | 9421 | 11353 | 13472 | 2395 | 2538 | 2708 | 2900 | | 3107 | 3325 | 3548 | | | | | | | | | | | | | | | | | | | |
| | | | | | | 38 | 3595 | 4540 | 5733 | 7158 | 8798 | 10632 | 12644 | 2561 | 2723 | 2913 | 3126 | | 3355 | 3595 | 3840 | | | | | | | | | | | | | | | | | | | |
| | | | | | | 43 | 3346 | 4224 | 5347 | 6696 | 8252 | 9996 | 11910 | 2718 | 2894 | 3099 | 3328 | | 3573 | 3829 | 4090 | | | | | | | | | | | | | | | | | | | |

**Note:** *Subject to modification without prior notification.*

GENERAL DATA & PERFORMANCE

# R404A -MBP - RTG20

| CONDENSING UNITS | | | | COMPRESSORS | | AMBIENT TEMP. | EN13125 - SUBCOOLING 0K - MIDPOINT COOLING CAPACITY (W) | | | | | | | | POWER INPUT (W) | | | | | | | | ECO DESIGN | | DIMENSIONS (mm) | | | WEIGHT | ACOUSTICS dB (A) | | CONDENSER/FAN | | | | | | LIQUID RECEIVER | CONNECTION DIAMETERS | | | |
|---|---|---|---|---|---|---|---|---|---|---|---|---|---|---|---|---|---|---|---|---|---|---|---|---|---|---|---|---|---|---|---|---|---|---|---|---|---|---|---|---|---|
| CONDENSING UNITS MODELS | CONDENSING UNIT BOM | VOLTAGE SUPPLY (V) | I NOM (A) | COMPRESSOR MODELS | COMPRESSOR BOM | (°C) | -25°C | -20°C | -15°C | -10°C | -5°C | 0°C | +5°C | +10°C | -25°C | -20°C | -15°C | | -10°C | -5°C | 0°C | +5°C | +10°C | Type | Cop/ Seer | W (width) | D (depth) | H (height) | Net (kg) | Sound Press. @10m | Sound power level | Number of fan | Fan diameter (mm) | Airflow ($m^3/h$) | Fan power (W) | Voltage supply (V) | Internal volume ($dm^3$) | $dm^3$ | Suction (mm) | Liquid (mm) | Suction (") | Liquid (") |
| UP-NEU6212GK-EAE00 | 667HAS6C2FI | CP: 230V-1ph-50Hz Fan: 230V-1ph-50Hz | 3,1 | NEU6212GK-A-CSIR | 958HA51M1AJ | 25 | - | 664 | 804 | 968 | 1152 | 1355 | 1573 | 1804 | - | 416 | 444 | | 474 | 504 | 535 | 567 | 601 | COP | 1,74 | 982 | 484 | 600 | 67 | 28 | 59 | 1 | 350 | 1695 | 67 | 230/1/50 | 0,23 | 1,6 | 10 | 6 | 3/8 | 1/4 |
| | | | | | | 32 | - | 585 | 715 | 865 | 1033 | 1217 | 1412 | 1617 | - | 428 | 462 | | 496 | 532 | 568 | 606 | 644 | | | | | | | | | | | | | | | | | | | | |
| | | | | | | 38 | - | 520 | 641 | 779 | 931 | 1096 | 1272 | 1454 | - | 440 | 478 | | 517 | 557 | 598 | 640 | 683 | | | | | | | | | | | | | | | | | | | | |
| | | | | | | 43 | - | - | 580 | 706 | 845 | 995 | 1152 | 1315 | - | - | 493 | | 536 | 579 | 624 | 669 | 715 | | | | | | | | | | | | | | | | | | | | |
| UP-NEU6215GK-EAE00 | 669NAS6C4FI | CP: 230V-1ph-50Hz Fan: 230V-1ph-50Hz | 2,8 | NEU6215GK-A-CSR | 959NA5190AF | 25 | - | 888 | 1074 | 1283 | 1512 | 1758 | 2017 | 2287 | - | 499 | 547 | | 599 | 654 | 714 | 778 | 849 | COP | 1,84 | 982 | 484 | 600 | 67 | 28 | 59 | 1 | 350 | 1695 | 67 | 230/1/50 | 0,23 | 1,6 | 10 | 6 | 3/8 | 1/4 |
| | | | | | | 32 | - | 794 | 962 | 1152 | 1359 | 1581 | 1816 | 2059 | - | 521 | 572 | | 627 | 687 | 752 | 823 | 900 | | | | | | | | | | | | | | | | | | | | |
| | | | | | | 38 | - | 714 | 867 | 1039 | 1227 | 1429 | 1642 | 1861 | - | 539 | 593 | | 652 | 717 | 788 | 865 | 949 | | | | | | | | | | | | | | | | | | | | |
| | | | | | | 43 | - | - | 786 | 944 | 1116 | 1301 | 1495 | 1695 | - | - | 610 | | 674 | 743 | 819 | 902 | 994 | | | | | | | | | | | | | | | | | | | | |
| UP-NT6222GK-EAE00 | 602CAS6C4FI | CP: 230V-1ph-50Hz Fan: 230V-1ph-50Hz | 4,3 | NT6222GK-A-CSR | 922CA0404AF | 25 | - | 1068 | 1303 | 1566 | 1853 | 2161 | 2485 | 2822 | - | 749 | 785 | | 835 | 898 | 971 | 1049 | 1130 | COP | 1,6 | 982 | 484 | 600 | 69 | 29 | 60 | 1 | 350 | 1695 | 67 | 230/1/50 | 0,23 | 1,6 | 12 | 8 | 1/2 | 3/8 |
| | | | | | | 32 | - | 946 | 1157 | 1389 | 1642 | 1911 | 2194 | 2490 | - | 764 | 812 | | 872 | 941 | 1016 | 1095 | 1172 | | | | | | | | | | | | | | | | | | | | |
| | | | | | | 38 | - | - | 1026 | 1233 | 1456 | 1693 | 1943 | 2203 | - | - | 840 | | 905 | 977 | 1053 | 1129 | 1202 | | | | | | | | | | | | | | | | | | | | |
| | | | | | | 43 | - | - | - | 1103 | 1301 | 1512 | 1733 | 1964 | - | - | - | | 934 | 1007 | 1081 | 1154 | 1222 | | | | | | | | | | | | | | | | | | | | |
| UP-NT6224GK-EAE00 | 622RAS6C4FI | CP: 230V-1ph-50Hz Fan: 230V-1ph-50Hz | 4,5 | NT6224GK-A-CSR | 922RA0404AF | 25 | - | 1284 | 1599 | 1950 | 2334 | 2743 | 3174 | 3620 | - | 797 | 857 | | 921 | 989 | 1062 | 1138 | 1217 | COP | 1,8 | 982 | 484 | 600 | 69 | 29 | 60 | 1 | 350 | 1523 | 67 | 230/1/50 | 0,45 | 2,3 | 12 | 8 | 1/2 | 3/8 |
| | | | | | | 32 | - | 1151 | 1426 | 1736 | 2076 | 2441 | 2825 | 3226 | - | 823 | 891 | | 964 | 1041 | 1121 | 1204 | 1289 | | | | | | | | | | | | | | | | | | | | |
| | | | | | | 38 | - | 1034 | 1278 | 1556 | 1861 | 2189 | 2537 | 2899 | - | 847 | 923 | | 1003 | 1086 | 1173 | 1262 | 1353 | | | | | | | | | | | | | | | | | | | | |
| | | | | | | 43 | - | - | 1154 | 1406 | 1684 | 1984 | 2302 | 2634 | - | - | 952 | | 1037 | 1126 | 1217 | 1311 | 1407 | | | | | | | | | | | | | | | | | | | | |
| UP-NT6226GK-EAE00 | 603BAS6C4FI | CP: 230V-1ph-50Hz Fan: 230V-1ph-50Hz | 4,8 | NT6226GK-A-CSR | 923BA0204AF | 25 | - | 1437 | 1756 | 2122 | 2527 | 2965 | 3428 | 3908 | - | 813 | 886 | | 964 | 1046 | 1134 | 1228 | 1328 | COP | 1,86 | 982 | 484 | 600 | 69 | 29 | 60 | 1 | 350 | 1523 | 67 | 230/1/50 | 0,45 | 2,3 | 12 | 8 | 1/2 | 3/8 |
| | | | | | | 32 | - | 1266 | 1556 | 1887 | 2253 | 2646 | 3059 | 3486 | - | 853 | 933 | | 1017 | 1105 | 1198 | 1297 | 1402 | | | | | | | | | | | | | | | | | | | | |
| | | | | | | 38 | - | 1129 | 1394 | 1694 | 2024 | 2377 | 2747 | 3128 | - | 884 | 972 | | 1062 | 1156 | 1256 | 1360 | 1471 | | | | | | | | | | | | | | | | | | | | |
| | | | | | | 43 | - | - | - | 1539 | 1838 | 2157 | 2490 | 2831 | - | - | - | | 1100 | 1200 | 1306 | 1416 | 1532 | | | | | | | | | | | | | | | | | | | | |
| UP-NJ9232GK-EAE00 | 643NAS6C4FI | CP: 230V-1ph-50Hz Fan: 230V-1ph-50Hz | 5,7 | NJ9232GK-A-CSR | 943NA1104AF | 25 | - | 1499 | 1893 | 2330 | 2802 | 3297 | 3807 | 4320 | - | 1011 | 1107 | | 1205 | 1307 | 1414 | 1528 | 1653 | COP | 1,66 | 982 | 484 | 600 | 76 | 30 | 61 | 1 | 350 | 1523 | 67 | 230/1/50 | 0,45 | 2,3 | 16 | 8 | 5/8 | 3/8 |
| | | | | | | 32 | - | 1283 | 1640 | 2036 | 2460 | 2903 | 3356 | 3809 | - | 1024 | 1125 | | 1230 | 1340 | 1457 | 1584 | 1721 | | | | | | | | | | | | | | | | | | | | |
| | | | | | | 38 | - | 1101 | 1423 | 1780 | 2161 | 2557 | 2959 | 3359 | - | 1031 | 1136 | | 1247 | 1365 | 1492 | 1628 | 1777 | | | | | | | | | | | | | | | | | | | | |
| | | | | | | 43 | - | - | - | 1564 | 1907 | 2262 | 2621 | 2976 | - | - | - | | 1259 | 1384 | 1518 | 1663 | 1821 | | | | | | | | | | | | | | | | | | | | |
| UP-NJ9232GS-EAE00 | 647NMS6C3FI | CP: 400V-3ph-50Hz Fan: 230V-1ph-50Hz | 2,1 | NJ9232GS-M | 947NM1101AA | 25 | - | 1580 | 1954 | 2403 | 2910 | 3459 | 4033 | 4614 | - | 913 | 1016 | | 1117 | 1220 | 1328 | 1447 | 1579 | COP | 1,87 | 982 | 484 | 600 | 76 | 30 | 61 | 1 | 350 | 1523 | 67 | 230/1/50 | 0,45 | 2,3 | 16 | 8 | 5/8 | 8 |
| | | | | | | 32 | - | 1395 | 1739 | 2145 | 2598 | 3083 | 3583 | 4083 | - | 925 | 1036 | | 1148 | 1265 | 1391 | 1528 | 1680 | | | | | | | | | | | | | | | | | | | | |
| | | | | | | 38 | - | 1235 | 1552 | 1920 | 2324 | 2752 | 3187 | 3617 | - | 935 | 1053 | | 1176 | 1305 | 1445 | 1598 | 1768 | | | | | | | | | | | | | | | | | | | | |
| | | | | | | 43 | - | - | - | 1727 | 2090 | 2469 | 2850 | 3221 | - | - | - | | 1199 | 1339 | 1491 | 1658 | 1842 | | | | | | | | | | | | | | | | | | | | |
| UP-NTU6238GKV-EAE00 | 605EAS6C4FI | CP: 230V-1ph-50Hz Fan: 230V-1ph-50Hz | 5,6 | NTU6238GKV-A-CSR | 925EA6004AF | 25 | - | 1850 | 2196 | 2629 | 3121 | 3648 | 4184 | 4707 | - | 954 | 1030 | | 1107 | 1188 | 1272 | 1363 | 1460 | COP | 1,99 | 982 | 484 | 600 | 76 | 30 | 61 | 1 | 350 | 1523 | 67 | 230/1/50 | 0,45 | 2,3 | 16 | 8 | 5/8 | 3/8 |
| | | | | | | 32 | - | 1657 | 1969 | 2355 | 2791 | 3251 | 3713 | 4157 | - | - | 1096 | | 1183 | 1274 | 1370 | 1473 | 1582 | | | | | | | | | | | | | | | | | | | | |
| | | | | | | 38 | - | - | 1770 | 2114 | 2499 | 2901 | 3299 | 3675 | - | - | 1147 | | 1244 | 1346 | 1454 | 1568 | 1689 | | | | | | | | | | | | | | | | | | | | |
| | | | | | | 43 | - | - | - | 1908 | 2249 | 2602 | 2946 | 3264 | - | - | - | | 1293 | 1405 | 1523 | 1648 | 1779 | | | | | | | | | | | | | | | | | | | | |
| UP-NJ9238GS-EAE00 | 647RMS6C3FI | CP: 400V-3ph-50Hz Fan: 230V-1ph-50Hz | 2,9 | NJ9238GS-M | 947RM1101AA | 25 | - | 1979 | 2442 | 2946 | 3480 | 4034 | 4599 | 5163 | - | 1110 | 1229 | | 1348 | 1471 | 1602 | 1746 | 1908 | COP | 1,89 | 982 | 484 | 600 | 76 | 30 | 61 | 1 | 350 | 1523 | 67 | 230/1/50 | 0,45 | 2,3 | 16 | 8 | 5/8 | 3/8 |
| | | | | | | 32 | - | 1744 | 2157 | 2606 | 3080 | 3571 | 4068 | 4563 | - | 1122 | 1250 | | 1382 | 1520 | 1669 | 1834 | 2018 | | | | | | | | | | | | | | | | | | | | |
| | | | | | | 38 | - | - | 1910 | 2308 | 2730 | 3164 | 3603 | 4037 | - | - | 1269 | | 1411 | 1563 | 1728 | 1910 | 2113 | | | | | | | | | | | | | | | | | | | | |
| | | | | | | 43 | - | - | - | 2056 | 2431 | 2818 | 3207 | | - | - | - | | 1436 | 1599 | 1777 | 1974 | - | | | | | | | | | | | | | | | | | | | | |
| UP-NJX6250GS-EAE00 | 645BSS6C3FI | CP: 400V-3ph-50Hz Fan: 230V-1ph-50Hz | 3,4 | NJX6250GS-M | 945BS2101AA | 25 | - | 2633 | 3202 | 3831 | 4511 | 5233 | 5987 | 6765 | - | 1405 | 1552 | | 1710 | 1880 | 2056 | 2238 | 2421 | COP | 1,88 | 1082 | 490 | 708 | 88 | 34 | 65 | 1 | 400 | 2673 | 120 | 230/1/50 | 0,71 | 3,9 | 16 | 10 | 5/8 | 3/8 |
| | | | | | | 32 | - | 2359 | 2865 | 3426 | 4032 | 4675 | 5346 | 6039 | - | 1487 | 1649 | | 1819 | 1997 | 2181 | 2367 | 2554 | | | | | | | | | | | | | | | | | | | | |
| | | | | | | 38 | - | 2129 | 2580 | 3080 | 3621 | 4194 | 4793 | 5410 | - | 1541 | 1721 | | 1907 | 2098 | 2292 | 2487 | 2680 | | | | | | | | | | | | | | | | | | | | |
| | | | | | | 43 | - | - | - | 2788 | 3273 | 3787 | 4324 | 4878 | - | - | - | | 1978 | 2183 | 2389 | 2594 | 2795 | | | | | | | | | | | | | | | | | | | | |
| UP-SE6015GK-EAE00 | 6S1ACS6C4FI | CP: 230V-1ph-50Hz Fan: 230V-1ph-50Hz | 8,5 | SE6015GK-C | 301AC1104AA | 25 | 2436 | 2946 | 3525 | 4175 | 4898 | 5693 | 6555 | 7481 | 1437 | 1533 | 1638 | | 1752 | 1872 | 1998 | 2129 | 2264 | COP | 1,95 | 1082 | 490 | 708 | 92 | 33 | 64 | 1 | 400 | 2673 | 120 | 230/1/50 | 0,71 | 3,9 | 18 | 12 | 5/8 | 1/2 |
| | | | | | | 32 | 2238 | 2704 | 3226 | 3806 | 4447 | 5149 | 5912 | 6732 | 1605 | 1713 | 1829 | | 1951 | 2079 | 2212 | 2348 | 2486 | | | | | | | | | | | | | | | | | | | | |
| | | | | | | 38 | - | 2480 | 2950 | 3468 | 4037 | 4660 | 5336 | 6064 | - | 1888 | 2014 | | 2144 | 2279 | 2417 | 2557 | 2698 | | | | | | | | | | | | | | | | | | | | |
| | | | | | | 43 | - | - | 2700 | 3165 | 3674 | 4229 | 4833 | 5485 | - | - | 2183 | | 2321 | 2462 | 2605 | 2748 | 2891 | | | | | | | | | | | | | | | | | | | | |
| UP-SE6015GS-EAE00 | 6S1AOS6C3FI | CP: 400V-3ph-50Hz Fan: 230V-1ph-50Hz | 3,2 | SE6015GS-O | 301AO1101AA | 25 | 2437 | 2947 | 3527 | 4178 | 4902 | 5697 | 6561 | 7489 | 1413 | 1508 | 1611 | | 1722 | 1840 | 1964 | 2093 | 2225 | COP | 1,99 | 1082 | 490 | 708 | 92 | 33 | 64 | 1 | 400 | 2673 | 120 | 230/1/50 | 0,71 | 3,9 | 18 | 12 | 3/4 | 1/2 |
| | | | | | | 32 | 2240 | 2706 | 3228 | 3809 | 4451 | 5155 | 5919 | 6741 | 1578 | 1684 | 1798 | | 1918 | 2043 | 2173 | 2307 | 2442 | | | | | | | | | | | | | | | | | | | | |
| | | | | | | 38 | - | 2483 | 2953 | 3472 | 4042 | 4666 | 5344 | 6074 | - | 1856 | 1979 | | 2107 | 2239 | 2375 | 2512 | 2650 | | | | | | | | | | | | | | | | | | | | |
| | | | | | | 43 | - | - | 2704 | 3170 | 3680 | 4237 | 4842 | 5496 | - | - | 2145 | | 2281 | 2419 | 2558 | 2699 | 2840 | | | | | | | | | | | | | | | | | | | | |
| UP-SE6018GK-EAE00 | 6S1BCS6C4FI | CP: 230V-1ph-50Hz Fan: 230V-1ph-50Hz | 10,2 | SE6018GK-C | 301BC1104AA | 25 | 2904 | 3511 | 4199 | 4972 | 5830 | 6771 | 7792 | 8887 | 1659 | 1773 | 1896 | | 2030 | 2171 | 2320 | 2475 | 2634 | COP | 2 | 1082 | 490 | 708 | 92 | 33 | 64 | 1 | 400 | 2545 | 120 | 230/1/50 | 0,91 | 3,9 | 18 | 12 | 3/4 | 1/2 |
| | | | | | | 32 | 2668 | 3223 | 3843 | 4532 | 5292 | 6124 | 7026 | 7995 | 1855 | 1983 | 2119 | | 2263 | 2413 | 2569 | 2730 | 2893 | | | | | | | | | | | | | | | | | | | | |
| | | | | | | 38 | - | 2956 | 3514 | 4129 | 4804 | 5541 | 6340 | 7201 | - | 2187 | 2335 | | 2488 | 2647 | 2809 | 2974 | 3140 | | | | | | | | | | | | | | | | | | | | |
| | | | | | | 43 | - | - | 3215 | 3767 | 4370 | 5028 | 5741 | 6512 | - | - | 2533 | | 2695 | 2860 | 3028 | 3197 | 3365 | | | | | | | | | | | | | | | | | | | | |
| UP-SE6018GS-EAE00 | 6S1BOS6C3FI | CP: 400V-3ph-50Hz Fan: 230V-1ph-50Hz | 4,7 | SE6018GS-O | 301BO1101AA | 25 | 2908 | 3516 | 4207 | 4982 | 5843 | 6788 | 7812 | 8912 | 1581 | 1689 | 1806 | | 1932 | 2066 | 2207 | 2354 | 2505 | COP | 2,11 | 1082 | 490 | 708 | 92 | 33 | 64 | 1 | 400 | 2545 | 120 | 230/1/50 | 0,91 | 3,9 | 18 | 12 | 3/4 | 1/2 |
| | | | | | | 32 | 2673 | 3229 | 3851 | 4543 | 5307 | 6143 | 7050 | 8025 | 1767 | 1888 | 2017 | | 2153 | 2295 | 2443 | 2595 | 2749 | | | | | | | | | | | | | | | | | | | | |
| | | | | | | 38 | - | 2964 | 3524 | 4142 | 4821 | 5562 | 6367 | 7234 | - | 2081 | 2220 | | 2366 | 2516 | 2669 | 2826 | 2983 | | | | | | | | | | | | | | | | | | | | |
| | | | | | | 43 | - | - | 3228 | 3783 | 4390 | 5053 | 5772 | 6549 | - | - | 2407 | | 2561 | 2717 | 2876 | 3036 | 3195 | | | | | | | | | | | | | | | | | | | | |
| UP-SE6021GK-EAE00 | 6S1CCS6C4FI | CP: 230V-1ph-50Hz Fan: 230V-1ph-50Hz | 11,6 | SE6021GK-C | 301CC1104AA | 25 | 3271 | 3947 | 4708 | 5557 | 6492 | 7508 | 8602 | 9765 | 1862 | 1996 | 2142 | | 2299 | 2467 | 2644 | 2828 | 3017 | SEPR | 2,94 | 1082 | 490 | 708 | 92 | 33 | 64 | 1 | 400 | 2545 | 120 | 230/1/50 | 0,91 | 3,9 | 18 | 12 | 3/4 | 1/2 |
| | | | | | | 32 | 3001 | 3617 | 4300 | 5053 | 5878 | 6772 | 7734 | 8758 | 2084 | 2234 | 2394 | | 2564 | 2742 | 2927 | 3117 | 3311 | | | | | | | | | | | | | | | | | | | | |
| | | | | | | 38 | - | 3308 | 3921 | 4590 | 5318 | 6107 | 6955 | 7860 | - | 2465 | 2638 | | 2819 | 3006 | 3198 | 3393 | 3590 | | | | | | | | | | | | | | | | | | | | |
| | | | | | | 43 | - | - | 3576 | 4174 | 4821 | 5521 | 6274 | 7080 | - | - | 2862 | | 3052 | 3247 | 3444 | 3643 | 3843 | | | | | | | | | | | | | | | | | | | | |
| UP-SE6021GS-EAE00 | 6S1COS6C3FI | CP: 400V-3ph-50Hz Fan: 230V-1ph-50Hz | 4,9 | SE6021GS-O | 301CO1101AA | 25 | 3277 | 3954 | 4718 | 5570 | 6509 | 7531 | 8630 | 9801 | 1766 | 1892 | 2030 | | 2178 | 2336 | 2503 | 2677 | 2855 | SEPR | 3,11 | 1082 | 490 | 708 | 92 | 33 | 64 | 1 | 400 | 2545 | 120 | 230/1/50 | 0,91 | 3,9 | 18 | 12 | 3/4 | 1/2 |
| | | | | | | 32 | 3008 | 3626 | 4312 | 5069 | 5898 | 6799 | 7767 | 8799 | 1975 | 2116 | 2267 | | 2427 | 2595 | 2769 | 2949 | 3131 | | | | | | | | | | | | | | | | | | | | |
| | | | | | | 38 | - | 3319 | 3935 | 4609 | 5343 | 6137 | 6993 | 7906 | - | 2333 | 2497 | | 2667 | 2843 | 3024 | 3208 | 3394 | | | | | | | | | | | | | | | | | | | | |
| | | | | | | 43 | - | - | 3593 | 4196 | 4849 | 5556 | 6317 | 7132 | - | - | 2707 | | 2886 | 3069 | 3255 | 3443 | 3631 | | | | | | | | | | | | | | | | | | | | |
| UP-SE6026GS-EAE00 | 6S1GOS6C3FI | CP: 400V-3ph-50Hz Fan: 230V-1ph-50Hz | 6,2 | SE6026GS-O | 301GO1101AA | 25 | 4224 | 5118 | 6139 | 7295 | 8588 | 10019 | 11585 | 13281 | 2232 | 2373 | 2527 | | 2693 | 2869 | 3053 | 3244 | 3439 | SEPR | 3,27 | 1277 | 538 | 1005 | 107 | 36 | 67 | 1 | 500 | 5195 | 220 | 230/1/50 | 1,34 | 6 | 22 | 16 | 7/8 | 5/8 |
| | | | | | | 32 | 3889 | 4709 | 5632 | 6668 | 7821 | 9094 | 10488 | 11998 | 2486 | 2646 | 2816 | | 2995 | 3181 | 3374 | 3572 | 3773 | | | | | | | | | | | | | | | | | | | | |
| | | | | | | 38 | 3581 | 4333 | 5170 | 6099 | 7129 | 8265 | 9508 | 10858 | 2734 | 2911 | 3096 | | 3287 | 3484 | 3684 | 3888 | 4093 | | | | | | | | | | | | | | | | | | | | |
| | | | | | | 43 | - | 3990 | 4752 | 5592 | 6518 | 7538 | 8656 | 9872 | - | 3155 | 3353 | | 3555 | 3761 | 3969 | 4178 | 4386 | | | | | | | | | | | | | | | | | | | | |
| UP-SE6030GS-EAE00 | 6S1DOS6C3FI | CP: 400V-3ph-50Hz Fan: 230V-1ph-50Hz | 6,6 | SE6030GS-O | 301DO1101AA | 25 | 4751 | 5747 | 6880 | 8154 | 9571 | 11129 | 12822 | 14643 | 2454 | 2617 | 2794 | | 2985 | 3188 | 3402 | 3624 | 3852 | SEPR | 3,3 | 1277 | 538 | 1005 | 107 | 36 | 67 | 1 | 500 | 5195 | 220 | 230/1/50 | 1,34 | 6 | 22 | 16 | 7/8 | 5/8 |
| | | | | | | 32 | 4371 | 5282 | 6304 | 7442 | 8702 | 10084 | 11585 | 13202 | 2737 | 2920 | 3115 | | 3321 | 3536 | 3760 | 3990 | 4223 | | | | | | | | | | | | | | | | | | | | |
| | | | | | | 38 | 4017 | 4853 | 5776 | 6795 | 7916 | 9144 | 10479 | 11920 | 3011 | 3214 | 3425 | | 3645 | 3872 | 4104 | 4341 | 4579 | | | | | | | | | | | | | | | | | | | | |
| | | | | | | 43 | - | - | 5297 | 6215 | 7221 | 8320 | 9516 | 10810 | - | - | 3710 | | 3942 | 4179 | 4419 | 4660 | 4902 | | | | | | | | | | | | | | | | | | | | |
| UP-SE6036GS-EAE00 | 6S1EOS6C3FI | CP: 400V-3ph-50Hz Fan: 230V-1ph-50Hz | 7,6 | SE6036GS-O | 301EO1101AA | 25 | 5876 | 7117 | 8533 | 10132 | 11920 | 13895 | 16051 | 18382 | 2882 | 3071 | 3277 | | 3498 | 3733 | 3980 | 4236 | 4498 | SEPR | 3,51 | 1277 | 538 | 1005 | 107 | 36 | 67 | 1 | 500 | 4739 | 220 | 230/1/50 | 2,23 | 6 | 22 | 16 | 7/8 | 5/8 |
| | | | | | | 32 | 5411 | 6548 | 7828 | 9261 | 10854 | 12611 | 14529 | 16605 | 3218 | 3431 | 3658 | | 3896 | 4146 | 4404 | 4669 | 4938 | | | | | | | | | | | | | | | | | | | | |
| | | | | | | 38 | 4981 | 6026 | 7184 | 8471 | 9894 | 11460 | 13171 | 15026 | 3544 | 3781 | 4027 | | 4282 | 4545 | 4813 | 5086 | 5361 | | | | | | | | | | | | | | | | | | | | |
| | | | | | | 43 | - | - | 6603 | 7765 | 9045 | 10452 | 11989 | 13660 | - | - | 4365 | | 4635 | 4910 | 5188 | 5467 | 5746 | | | | | | | | | | | | | | | | | | | | |
| UP-SE6043GS-EAE00 | 6S1FOS6C3FI | CP: 400V-3ph-50Hz Fan: 230V-1ph-50Hz | 8,6 | SE6043GS-O | 301FO1101AA | 25 | 6889 | 8323 | 9948 | 11767 | 13781 | 15983 | 18365 | 20912 | 3447 | 3688 | 3952 | | 4236 | 4538 | 4856 | 5187 | 5528 | SEPR | 3,37 | 1277 | 538 | 1005 | 107 | 36 | 67 | 1 | 500 | 4739 | 220 | 230/1/50 | 2,23 | 6 | 22 | 16 | 7/8 | 5/8 |
| | | | | | | 32 | 6332 | 7643 | 9105 | 10728 | 12513 | 14462 | 16568 | 18823 | 3855 | 4127 | 4416 | | 4721 | 5042 | 5374 | 5717 | 6065 | | | | | | | | | | | | | | | | | | | | |
| | | | | | | 38 | - | 7012 | 8330 | 9778 | 11364 | 13091 | 14959 | 16963 | - | 4550 | 4864 | | 5189 | 5526 | 5871 | 6223 | 6578 | | | | | | | | | | | | | | | | | | | | |
| | | | | | | 43 | - | - | 7627 | 8928 | 10346 | 11888 | 13557 | 15352 | - | - | 5274 | | 5617 | 5968 | 6324 | 6682 | 7042 | | | | | | | | | | | | | | | | | | | | |

**Note:** *Subject to modification without prior notification.*

GENERAL DATA & PERFORMANCE

# R404A -MBP - SH10K

| CONDENSING UNITS | | | | COMPRESSORS | | AMBIENT TEMP. | EN13125 - SUBCOOLING 0K - MIDPOINT | | | | | | | | POWER INPUT (W) | | | | | | | | | ECO DESIGN | | DIMENSIONS (mm) | | | WEIGHT | ACOUSTICS dB (A) | | CONDENSER/FAN | | | | | | LIQUID RECEIVER | CONNECTION DIAMETERS | | | |
|---|---|---|---|---|---|---|---|---|---|---|---|---|---|---|---|---|---|---|---|---|---|---|---|---|---|---|---|---|---|---|---|---|---|---|---|---|---|---|---|---|---|---|
| | | | | | | | COOLING CAPACITY (W) | | | | | | | | | | | | | | | | | | | | | | | | | | | | | | | | | | | |
| CONDENSING UNITS MODELS | CONDENSING UNIT BOM | VOLTAGE SUPPLY (V) | I NOM (A) | COMPRESSOR MODELS | COMPRESSOR BOM | (°C) | -25°C | -20°C | -15°C | -10°C | -5°C | 0°C | +5°C | +10°C | -25°C | -20°C | -15°C | | -10°C | -5°C | 0°C | +5°C | +10°C | Type | Cop/ Seer | W (width) | D (depth) | H (height) | Net (kg) | Sound Press. @10m | Sound power level | Number of fan | Fan diameter (mm) | Airflow ($m^3/h$) | Fan power (W) | Voltage supply (V) | Internal volume ($dm^3$) | $dm^3$ | Suction (mm) | Liquid (mm) | Suction (") | Liquid (") |
| **UP-NEU6212GK-EAE00** | 667HAS6C2FI | CP: 230V-1ph-50Hz Fan: 230V-1ph-50Hz | 3,1 | **NEU6212GK-A-CSIR** | 958HA51M1AJ | 25 | - | 619 | 761 | 928 | 1119 | 1330 | 1561 | 1807 | - | 413 | 441 | | 470 | 500 | 532 | 565 | 601 | - | - | 982 | 484 | 600 | 67 | 28 | 59 | 1 | 350 | 1695 | 67 | 230/1/50 | 0,23 | 1,6 | 10 | 6 | 3/8 | 1/4 |
| | | | | | | 32 | - | 543 | 674 | 826 | 998 | 1189 | 1397 | 1619 | - | 422 | 456 | | 491 | 526 | 564 | 603 | 644 | | | | | | | | | | | | | | | | | | | | |
| | | | | | | 38 | - | 475 | 594 | 733 | 890 | 1064 | 1252 | 1453 | - | 433 | 471 | | 510 | 551 | 593 | 637 | 683 | | | | | | | | | | | | | | | | | | | | |
| | | | | | | 43 | - | - | 528 | 655 | 799 | 958 | 1130 | 1314 | - | - | 485 | | 528 | 572 | 618 | 665 | 715 | | | | | | | | | | | | | | | | | | | | |
| **UP-NEU6215GK-EAE00** | 669NAS6C4FI | CP: 230V-1ph-50Hz Fan: 230V-1ph-50Hz | 2,8 | **NEU6215GK-A-CSR** | 959NA5190AF | 25 | - | 829 | 1018 | 1232 | 1468 | 1725 | 2000 | 2291 | - | 493 | 541 | | 593 | 648 | 709 | 775 | 849 | - | - | 982 | 484 | 600 | 67 | 28 | 59 | 1 | 350 | 1695 | 67 | 230/1/50 | 0,23 | 1,6 | 10 | 6 | 3/8 | 1/4 |
| | | | | | | 32 | - | 736 | 904 | 1096 | 1309 | 1542 | 1792 | 2058 | - | 514 | 564 | | 619 | 679 | 746 | 819 | 900 | | | | | | | | | | | | | | | | | | | | |
| | | | | | | 38 | - | 649 | 800 | 974 | 1168 | 1382 | 1613 | 1859 | - | 530 | 584 | | 643 | 708 | 780 | 860 | 949 | | | | | | | | | | | | | | | | | | | | |
| | | | | | | 43 | - | - | 713 | 872 | 1052 | 1250 | 1465 | 1695 | - | - | 600 | | 663 | 733 | 810 | 896 | 993 | | | | | | | | | | | | | | | | | | | | |
| **UP-NT6222GK-EAE00** | 602CAS6C4FI | CP: 230V-1ph-50Hz Fan: 230V-1ph-50Hz | 4,3 | **NT6222GK-A-CSR** | 922CA0404AF | 25 | - | 1001 | 1235 | 1501 | 1795 | 2115 | 2458 | 2822 | - | 741 | 775 | | 825 | 888 | 963 | 1044 | 1130 | - | - | 982 | 484 | 600 | 69 | 29 | 60 | 1 | 350 | 1695 | 67 | 230/1/50 | 0,23 | 1,6 | 12 | 8 | 1/2 | 3/8 |
| | | | | | | 32 | - | 872 | 1081 | 1316 | 1577 | 1860 | 2165 | 2489 | - | 753 | 800 | | 859 | 929 | 1007 | 1089 | 1171 | | | | | | | | | | | | | | | | | | | | |
| | | | | | | 38 | - | - | 944 | 1154 | 1386 | 1638 | 1910 | 2201 | - | - | 825 | | 890 | 963 | 1042 | 1122 | 1201 | | | | | | | | | | | | | | | | | | | | |
| | | | | | | 43 | - | - | - | 1019 | 1226 | 1453 | 1698 | 1961 | - | - | - | | 917 | 991 | 1069 | 1147 | 1221 | | | | | | | | | | | | | | | | | | | | |
| **UP-NT6224GK-EAE00** | 622RAS6C4FI | CP: 230V-1ph-50Hz Fan: 230V-1ph-50Hz | 4,5 | **NT6224GK-A-CSR** | 922RA0404AF | 25 | - | 1194 | 1513 | 1872 | 2267 | 2694 | 3148 | 3628 | - | 789 | 848 | | 912 | 980 | 1054 | 1133 | 1217 | - | - | 982 | 484 | 600 | 69 | 29 | 60 | 1 | 350 | 1523 | 67 | 230/1/50 | 0,45 | 2,3 | 12 | 8 | 1/2 | 3/8 |
| | | | | | | 32 | - | 1069 | 1342 | 1654 | 2002 | 2382 | 2791 | 3226 | - | 811 | 879 | | 951 | 1029 | 1111 | 1198 | 1290 | | | | | | | | | | | | | | | | | | | | |
| | | | | | | 38 | - | 942 | 1182 | 1459 | 1773 | 2118 | 2493 | 2894 | - | 834 | 909 | | 988 | 1072 | 1161 | 1255 | 1353 | | | | | | | | | | | | | | | | | | | | |
| | | | | | | 43 | - | - | 1046 | 1299 | 1587 | 1907 | 2257 | 2633 | - | - | 935 | | 1020 | 1110 | 1204 | 1303 | 1406 | | | | | | | | | | | | | | | | | | | | |
| **UP-NT6226GK-EAE00** | 603BAS6C4FI | CP: 230V-1ph-50Hz Fan: 230V-1ph-50Hz | 4,8 | **NT6226GK-A-CSR** | 923BA0204AF | 25 | - | 1342 | 1665 | 2038 | 2454 | 2910 | 3398 | 3913 | - | 804 | 876 | | 953 | 1036 | 1125 | 1222 | 1328 | - | - | 982 | 484 | 600 | 69 | 29 | 60 | 1 | 350 | 1523 | 67 | 230/1/50 | 0,45 | 2,3 | 12 | 8 | 1/2 | 3/8 |
| | | | | | | 32 | - | 1174 | 1462 | 1796 | 2169 | 2579 | 3019 | 3484 | - | 840 | 919 | | 1002 | 1091 | 1187 | 1290 | 1403 | | | | | | | | | | | | | | | | | | | | |
| | | | | | | 38 | - | 1026 | 1286 | 1587 | 1926 | 2298 | 2699 | 3124 | - | 870 | 955 | | 1045 | 1141 | 1243 | 1352 | 1471 | | | | | | | | | | | | | | | | | | | | |
| | | | | | | 43 | - | - | 1145 | 1421 | 1731 | 2073 | 2442 | 2833 | - | - | - | | 1081 | 1183 | 1291 | 1406 | 1530 | | | | | | | | | | | | | | | | | | | | |
| **UP-NJ9232GK-EAE00** | 643NAS6C4FI | CP: 230V-1ph-50Hz Fan: 230V-1ph-50Hz | 5,7 | **NJ9232GK-A-CSR** | 943NA1104AF | 25 | - | 1405 | 1797 | 2238 | 2719 | 3232 | 3769 | 4323 | - | 1001 | 1095 | | 1192 | 1293 | 1402 | 1521 | 1653 | - | - | 982 | 484 | 600 | 76 | 30 | 61 | 1 | 350 | 1523 | 67 | 230/1/50 | 0,45 | 2,3 | 16 | 8 | 5/8 | 3/8 |
| | | | | | | 32 | - | 1190 | 1540 | 1935 | 2367 | 2828 | 3310 | 3806 | - | 1010 | 1110 | | 1214 | 1325 | 1445 | 1576 | 1722 | | | | | | | | | | | | | | | | | | | | |
| | | | | | | 38 | - | 1002 | 1315 | 1669 | 2058 | 2474 | 2909 | 3356 | - | 1015 | 1120 | | 1230 | 1349 | 1478 | 1620 | 1776 | | | | | | | | | | | | | | | | | | | | |
| | | | | | | 43 | - | - | - | 1449 | 1801 | 2178 | 2573 | 2979 | - | - | - | | 1241 | 1366 | 1502 | 1652 | 1818 | | | | | | | | | | | | | | | | | | | | |
| **UP-NJ9232GS-EAE00** | 647NMS6C3FI | CP: 400V-3ph-50Hz Fan: 230V-1ph-50Hz | 2,1 | **NJ9232GS-M** | 947NM1101AA | 25 | - | 1478 | 1853 | 2306 | 2822 | 3390 | 3992 | 4616 | - | 904 | 1005 | | 1105 | 1207 | 1317 | 1439 | 1579 | - | - | 982 | 484 | 600 | 76 | 30 | 61 | 1 | 350 | 1523 | 67 | 230/1/50 | 0,45 | 2,3 | 16 | 8 | 5/8 | 8 |
| | | | | | | 32 | - | 1292 | 1631 | 2036 | 2497 | 3000 | 3532 | 4080 | - | 912 | 1022 | | 1133 | 1250 | 1377 | 1519 | 1681 | | | | | | | | | | | | | | | | | | | | |
| | | | | | | 38 | - | 1123 | 1431 | 1796 | 2210 | 2659 | 3132 | 3616 | - | 920 | 1037 | | 1159 | 1288 | 1430 | 1588 | 1767 | | | | | | | | | | | | | | | | | | | | |
| | | | | | | 43 | - | - | - | 1595 | 1970 | 2374 | 2798 | 3229 | - | - | - | | 1180 | 1319 | 1473 | 1645 | 1839 | | | | | | | | | | | | | | | | | | | | |
| **UP-NTU6238GKV-EAE00** | 605EAS6C4FI | CP: 230V-1ph-50Hz Fan: 230V-1ph-50Hz | 5,6 | **NTU6238GKV-A-CSR** | 925EA6004AF | 25 | - | 1731 | 2082 | 2521 | 3026 | 3573 | 4141 | 4711 | - | 941 | 1015 | | 1091 | 1172 | 1259 | 1355 | 1461 | - | - | 982 | 484 | 600 | 76 | 30 | 61 | 1 | 350 | 1523 | 67 | 230/1/50 | 0,45 | 2,3 | 16 | 8 | 5/8 | 3/8 |
| | | | | | | 32 | - | 1530 | 1842 | 2233 | 2680 | 3163 | 3661 | 4156 | - | 992 | 1077 | | 1164 | 1256 | 1355 | 1464 | 1583 | | | | | | | | | | | | | | | | | | | | |
| | | | | | | 38 | - | - | 1627 | 1976 | 2375 | 2803 | 3242 | 3675 | - | - | 1126 | | 1223 | 1326 | 1437 | 1557 | 1688 | | | | | | | | | | | | | | | | | | | | |
| | | | | | | 43 | - | - | - | 1761 | 2119 | 2502 | 2892 | 3273 | - | - | - | | 1269 | 1382 | 1502 | 1633 | 1774 | | | | | | | | | | | | | | | | | | | | |
| **UP-NJ9238GS-EAE00** | 647RMS6C3FI | CP: 400V-3ph-50Hz Fan: 230V-1ph-50Hz | 2,9 | **NJ9238GS-M** | 947RM1101AA | 25 | - | 1853 | 2316 | 2824 | 3370 | 3946 | 4546 | 5161 | - | 1096 | 1214 | | 1331 | 1454 | 1587 | 1736 | 1908 | - | - | 982 | 484 | 600 | 76 | 30 | 61 | 1 | 350 | 1523 | 67 | 230/1/50 | 0,45 | 2,3 | 16 | 8 | 5/8 | 3/8 |
| | | | | | | 32 | - | 1611 | 2017 | 2467 | 2953 | 3469 | 4006 | 4557 | - | 1105 | 1232 | | 1362 | 1501 | 1652 | 1823 | 2017 | | | | | | | | | | | | | | | | | | | | |
| | | | | | | 38 | - | - | 1755 | 2155 | 2591 | 3055 | 3541 | 4039 | - | - | 1248 | | 1389 | 1541 | 1708 | 1896 | 2110 | | | | | | | | | | | | | | | | | | | | |
| | | | | | | 43 | - | - | - | 1897 | 2291 | 2713 | 3155 | - | - | - | - | | 1411 | 1574 | 1754 | 1956 | 2187 | | | | | | | | | | | | | | | | | | | | |
| **UP-NJX6250GS-EAE00** | 645BSS6C3FI | CP: 400V-3ph-50Hz Fan: 230V-1ph-50Hz | 3,4 | **NJX6250GS-M** | 945BS2101AA | 25 | - | 2473 | 3042 | 3678 | 4375 | 5127 | 5928 | 6770 | - | 1385 | 1530 | | 1689 | 1859 | 2039 | 2228 | 2422 | - | - | 1082 | 490 | 708 | 88 | 34 | 65 | 1 | 400 | 2673 | 120 | 230/1/50 | 0,71 | 3,9 | 16 | 10 | 5/8 | 3/8 |
| | | | | | | 32 | - | 2178 | 2682 | 3250 | 3875 | 4553 | 5276 | 6039 | - | 1464 | 1623 | | 1793 | 1972 | 2160 | 2354 | 2554 | | | | | | | | | | | | | | | | | | | | |
| | | | | | | 38 | - | 1931 | 2378 | 2886 | 3448 | 4059 | 4713 | 5406 | - | 1515 | 1691 | | 1876 | 2068 | 2267 | 2471 | 2679 | | | | | | | | | | | | | | | | | | | | |
| | | | | | | 43 | - | - | - | 2580 | 3087 | 3642 | 4238 | 4871 | - | - | - | | 1942 | 2148 | 2360 | 2575 | 2793 | | | | | | | | | | | | | | | | | | | | |
| **UP-SE6015GK-EAE00** | 6S1ACS6C4FI | CP: 230V-1ph-50Hz Fan: 230V-1ph-50Hz | 8,5 | **SE6015GK-C** | 301AC1104AA | 25 | 2235 | 2751 | 3338 | 4003 | 4749 | 5578 | 6491 | 7485 | 1412 | 1507 | 1611 | | 1724 | 1846 | 1977 | 2117 | 2265 | - | - | 1082 | 490 | 708 | 92 | 33 | 64 | 1 | 400 | 2673 | 120 | 230/1/50 | 0,71 | 3,9 | 18 | 12 | 5/8 | 1/2 |
| | | | | | | 32 | 2035 | 2495 | 3016 | 3605 | 4268 | 5008 | 5827 | 6724 | 1571 | 1677 | 1792 | | 1914 | 2045 | 2184 | 2331 | 2486 | | | | | | | | | | | | | | | | | | | | |
| | | | | | | 38 | 1824 | 2239 | 2707 | 3235 | 3831 | 4498 | 5240 | 6057 | 1726 | 1842 | 1966 | | 2098 | 2236 | 2382 | 2536 | 2697 | | | | | | | | | | | | | | | | | | | | |
| | | | | | | 43 | 1629 | 2009 | 2434 | 2914 | 3455 | 4063 | 4743 | 5495 | 1867 | 1993 | 2126 | | 2265 | 2410 | 2563 | 2722 | 2887 | | | | | | | | | | | | | | | | | | | | |
| **UP-SE6015GS-EAE00** | 6S1AOS6C3FI | CP: 400V-3ph-50Hz Fan: 230V-1ph-50Hz | 3,2 | **SE6015GS-O** | 301AO1101AA | 25 | 2236 | 2752 | 3340 | 4006 | 4753 | 5583 | 6497 | 7493 | 1389 | 1482 | 1584 | | 1695 | 1815 | 1944 | 2081 | 2226 | - | - | 1082 | 490 | 708 | 92 | 33 | 64 | 1 | 400 | 2673 | 120 | 230/1/50 | 0,71 | 3,9 | 18 | 12 | 3/4 | 1/2 |
| | | | | | | 32 | 2036 | 2497 | 3019 | 3609 | 4273 | 5014 | 5834 | 6733 | 1545 | 1649 | 1761 | | 1882 | 2010 | 2146 | 2291 | 2443 | | | | | | | | | | | | | | | | | | | | |
| | | | | | | 38 | 1826 | 2242 | 2710 | 3240 | 3836 | 4505 | 5248 | 6066 | 1697 | 1811 | 1933 | | 2061 | 2197 | 2341 | 2491 | 2649 | | | | | | | | | | | | | | | | | | | | |
| | | | | | | 43 | 1632 | 2012 | 2438 | 2919 | 3461 | 4071 | 4751 | 5505 | 1835 | 1959 | 2089 | | 2225 | 2368 | 2517 | 2674 | 2836 | | | | | | | | | | | | | | | | | | | | |
| **UP-SE6018GK-EAE00** | 6S1BCS6C4FI | CP: 230V-1ph-50Hz Fan: 230V-1ph-50Hz | 10,2 | **SE6018GK-C** | 301BC1104AA | 25 | 2665 | 3278 | 3977 | 4766 | 5652 | 6634 | 7715 | 8891 | 1630 | 1742 | 1864 | | 1997 | 2141 | 2296 | 2460 | 2635 | - | - | 1082 | 490 | 708 | 92 | 33 | 64 | 1 | 400 | 2545 | 120 | 230/1/50 | 0,91 | 3,9 | 18 | 12 | 3/4 | 1/2 |
| | | | | | | 32 | 2425 | 2972 | 3592 | 4292 | 5078 | 5955 | 6924 | 7985 | 1816 | 1940 | 2075 | | 2219 | 2373 | 2537 | 2710 | 2893 | | | | | | | | | | | | | | | | | | | | |
| | | | | | | 38 | 2173 | 2667 | 3223 | 3851 | 4557 | 5348 | 6226 | 7192 | 1996 | 2133 | 2279 | | 2433 | 2596 | 2768 | 2949 | 3139 | | | | | | | | | | | | | | | | | | | | |
| | | | | | | 43 | 1941 | 2393 | 2898 | 3468 | 4110 | 4831 | 5635 | 6524 | 2161 | 2309 | 2465 | | 2628 | 2799 | 2978 | 3166 | 3361 | | | | | | | | | | | | | | | | | | | | |
| **UP-SE6018GS-EAE00** | 6S1BOS6C3FI | CP: 400V-3ph-50Hz Fan: 230V-1ph-50Hz | 4,7 | **SE6018GS-O** | 301BO1101AA | 25 | 2668 | 3284 | 3984 | 4776 | 5665 | 6651 | 7736 | 8917 | 1554 | 1659 | 1775 | | 1901 | 2038 | 2184 | 2340 | 2506 | - | - | 1082 | 490 | 708 | 92 | 33 | 64 | 1 | 400 | 2545 | 120 | 230/1/50 | 0,91 | 3,9 | 18 | 12 | 3/4 | 1/2 |
| | | | | | | 32 | 2430 | 2979 | 3601 | 4304 | 5094 | 5975 | 6948 | 8015 | 1729 | 1847 | 1975 | | 2111 | 2257 | 2412 | 2577 | 2749 | | | | | | | | | | | | | | | | | | | | |
| | | | | | | 38 | 2180 | 2676 | 3234 | 3865 | 4575 | 5370 | 6253 | 7225 | 1900 | 2030 | 2168 | | 2314 | 2468 | 2631 | 2802 | 2982 | | | | | | | | | | | | | | | | | | | | |
| | | | | | | 43 | 1949 | 2403 | 2911 | 3483 | 4129 | 4855 | 5664 | 6560 | 2056 | 2196 | 2343 | | 2498 | 2660 | 2829 | 3007 | 3191 | | | | | | | | | | | | | | | | | | | | |
| **UP-SE6021GK-EAE00** | 6S1CCS6C4FI | CP: 230V-1ph-50Hz Fan: 230V-1ph-50Hz | 11,6 | **SE6021GK-C** | 301CC1104AA | 25 | 3004 | 3685 | 4456 | 5321 | 6285 | 7348 | 8508 | 9763 | 1827 | 1957 | 2101 | | 2259 | 2429 | 2613 | 2809 | 3018 | - | - | 1082 | 490 | 708 | 92 | 33 | 64 | 1 | 400 | 2545 | 120 | 230/1/50 | 0,91 | 3,9 | 18 | 12 | 3/4 | 1/2 |
| | | | | | | 32 | 2722 | 3328 | 4009 | 4775 | 5629 | 6575 | 7615 | 8745 | 2036 | 2182 | 2340 | | 2510 | 2692 | 2886 | 3092 | 3311 | | | | | | | | | | | | | | | | | | | | |
| | | | | | | 38 | 2431 | 2977 | 3587 | 4271 | 5037 | 5889 | 6829 | 7858 | 2239 | 2399 | 2570 | | 2751 | 2943 | 3147 | 3362 | 3587 | | | | | | | | | | | | | | | | | | | | |
| | | | | | | 43 | 2165 | 2663 | 3217 | 3837 | 4532 | 5307 | 6167 | 7113 | 2424 | 2597 | 2779 | | 2970 | 3171 | 3383 | 3605 | 3837 | | | | | | | | | | | | | | | | | | | | |
| **UP-SE6021GS-EAE00** | 6S1COS6C3FI | CP: 400V-3ph-50Hz Fan: 230V-1ph-50Hz | 4,9 | **SE6021GS-O** | 301CO1101AA | 25 | 3009 | 3693 | 4466 | 5335 | 6303 | 7371 | 8537 | 9799 | 1733 | 1856 | 1992 | | 2140 | 2301 | 2474 | 2659 | 2856 | - | - | 1082 | 490 | 708 | 92 | 33 | 64 | 1 | 400 | 2545 | 120 | 230/1/50 | 0,91 | 3,9 | 18 | 12 | 3/4 | 1/2 |
| | | | | | | 32 | 2730 | 3338 | 4023 | 4792 | 5651 | 6603 | 7648 | 8786 | 1930 | 2068 | 2216 | | 2376 | 2548 | 2731 | 2925 | 3131 | | | | | | | | | | | | | | | | | | | | |
| | | | | | | 38 | 2441 | 2989 | 3603 | 4291 | 5062 | 5920 | 6866 | 7903 | 2121 | 2272 | 2433 | | 2603 | 2784 | 2976 | 3178 | 3391 | | | | | | | | | | | | | | | | | | | | |
| | | | | | | 43 | 2176 | 2677 | 3234 | 3859 | 4559 | 5340 | 6207 | 7161 | 2296 | 2458 | 2629 | | 2809 | 2999 | 3198 | 3407 | 3625 | | | | | | | | | | | | | | | | | | | | |
| **UP-SE6026GS-EAE00** | 6S1GOS6C3FI | CP: 400V-3ph-50Hz Fan: 230V-1ph-50Hz | 6,2 | **SE6026GS-O** | 301GO1101AA | 25 | 3870 | 4776 | 5815 | 6998 | 8334 | 9828 | 11482 | 13296 | 2198 | 2337 | 2490 | | 2656 | 2834 | 3025 | 3227 | 3440 | - | - | 1277 | 538 | 1005 | 107 | 36 | 67 | 1 | 500 | 5195 | 220 | 230/1/50 | 1,34 | 6 | 22 | 16 | 7/8 | 5/8 |
| | | | | | | 32 | 3543 | 4354 | 5279 | 6332 | 7524 | 8861 | 10349 | 11990 | 2439 | 2595 | 2763 | | 2943 | 3134 | 3337 | 3550 | 3774 | | | | | | | | | | | | | | | | | | | | |
| | | | | | | 38 | 3191 | 3926 | 4760 | 5707 | 6780 | 7990 | 9342 | 10841 | 2674 | 2847 | 3029 | | 3222 | 3424 | 3637 | 3860 | 4093 | | | | | | | | | | | | | | | | | | | | |
| | | | | | | 43 | 2863 | 3538 | 4297 | 5160 | 6139 | 7245 | 8487 | 9870 | 2890 | 3077 | 3272 | | 3476 | 3689 | 3911 | 4142 | 4382 | | | | | | | | | | | | | | | | | | | | |
| **UP-SE6030GS-EAE00** | 6S1DOS6C3FI | CP: 400V-3ph-50Hz Fan: 230V-1ph-50Hz | 6,6 | **SE6030GS-O** | 301DO1101AA | 25 | 4358 | 5367 | 6517 | 7819 | 9282 | 10909 | 12700 | 14653 | 2413 | 2573 | 2749 | | 2940 | 3146 | 3367 | 3603 | 3853 | - | - | 1277 | 538 | 1005 | 107 | 36 | 67 | 1 | 500 | 5195 | 220 | 230/1/50 | 1,34 | 6 | 22 | 16 | 7/8 | 5/8 |
| | | | | | | 32 | 3976 | 4877 | 5899 | 7056 | 8359 | 9813 | 11422 | 13187 | 2681 | 2860 | 3052 | | 3259 | 3480 | 3715 | 3963 | 4224 | | | | | | | | | | | | | | | | | | | | |
| | | | | | | 38 | 3572 | 4387 | 5306 | 6346 | 7518 | 8831 | 10292 | 11903 | 2941 | 3137 | 3346 | | 3567 | 3801 | 4047 | 4306 | 4577 | | | | | | | | | | | | | | | | | | | | |
| | | | | | | 43 | 3199 | 3945 | 4782 | 5727 | 6795 | 7995 | 9336 | 10821 | 3179 | 3391 | 3614 | | 3848 | 4093 | 4349 | 4617 | 4896 | | | | | | | | | | | | | | | | | | | | |
| **UP-SE6036GS-EAE00** | 6S1EOS6C3FI | CP: 400V-3ph-50Hz Fan: 230V-1ph-50Hz | 7,6 | **SE6036GS-O** | 301EO1101AA | 25 | 5385 | 6643 | 8083 | 9720 | 11566 | 13627 | 15906 | 18401 | 2836 | 3022 | 3226 | | 3448 | 3686 | 3942 | 4213 | 4500 | - | - | 1277 | 538 | 1005 | 107 | 36 | 67 | 1 | 500 | 4739 | 220 | 230/1/50 | 2,23 | 6 | 22 | 16 | 7/8 | 5/8 |
| | | | | | | 32 | 4928 | 6054 | 7336 | 8793 | 10439 | 12285 | 14335 | 16592 | 3154 | 3363 | 3587 | | 3827 | 4082 | 4353 | 4639 | 4940 | | | | | | | | | | | | | | | | | | | | |
| | | | | | | 38 | 4438 | 5458 | 6613 | 7924 | 9407 | 11077 | 12940 | 15002 | 3465 | 3694 | 3937 | | 4194 | 4465 | 4750 | 5048 | 5360 | | | | | | | | | | | | | | | | | | | | |
| | | | | | | 43 | 3982 | 4918 | 5971 | 7165 | 8518 | 10045 | 11757 | 13660 | 3749 | 3997 | 4257 | | 4529 | 4813 | 5110 | 5419 | 5741 | | | | | | | | | | | | | | | | | | | | |
| **UP-SE6043GS-EAE00** | 6S1FOS6C3FI | CP: 400V-3ph-50Hz Fan: 230V-1ph-50Hz | 8,6 | **SE6043GS-O** | 301FO1101AA | 25 | 6323 | 7774 | 9421 | 11278 | 13356 | 15656 | 18179 | 20918 | 3385 | 3622 | 3882 | | 4165 | 4473 | 4803 | 5155 | 5530 | - | - | 1277 | 538 | 1005 | 107 | 36 | 67 | 1 | 500 | 4739 | 220 | 230/1/50 | 2,23 | 6 | 22 | 16 | 7/8 | 5/8 |
| | | | | | | 32 | 5755 | 7048 | 8510 | 10157 | 12005 | 14059 | 16324 | 18798 | 3771 | 4035 | 4320 | | 4627 | 4955 | 5304 | 5675 | 6066 | | | | | | | | | | | | | | | | | | | | |
| | | | | | | 38 | 5160 | 6328 | 7641 | 9119 | 10780 | 12635 | 14689 | 16945 | 4146 | 4435 | 4743 | | 5071 | 5417 | 5783 | 6169 | 6574 | | | | | | | | | | | | | | | | | | | | |
| | | | | | | 43 | 4613 | 5682 | 6876 | 8219 | 9731 | 11424 | 13308 | 15388 | 4488 | 4800 | 5129 | | 5474 | 5837 | 6218 | 6616 | 7032 | | | | | | | | | | | | | | | | | | | | |

**Note:** *Subject to modification without prior notification.*

GENERAL DATA & PERFORMANCE

# R452A - MBP - RTG20

| CONDENSING UNITS | | | | COMPRESSORS | | AMBIENT TEMP. | EN13125 - SUBCOOLING 0K - MIDPOINT | | | | | | | | POWER INPUT (W) | | | | | | | | ECO DESIGN | | DIMENSIONS (mm) | | | WEIGHT | ACOUSTICS dB (A) | | CONDENSER/FAN | | | | | | LIQUID RECEIVER | CONNECTION DIAMETERS | | | |
|---|---|---|---|---|---|---|---|---|---|---|---|---|---|---|---|---|---|---|---|---|---|---|---|---|---|---|---|---|---|---|---|---|---|---|---|---|---|---|---|---|---|
| | | | | | | | COOLING CAPACITY (W) | | | | | | | | | | | | | | | | | | | | | | | | | | | | | | | | | | |
| CONDENSING UNITS MODELS | CONDENSING UNIT BOM | VOLTAGE SUPPLY (V) | I NOM (A) | COMPRESSOR MODELS | COMPRESSOR BOM | (°C) | -25°C | -20°C | -15°C | -10°C | -5°C | 0°C | +5°C | +10°C | -25°C | -20°C | -15°C | | -10°C | -5°C | 0°C | +5°C | +10°C | Type | Cop/ Seer | W (width) | D (depth) | H (height) | Net (kg) | Sound Press. @10m | Sound power level | Number of fan | Fan diameter (mm) | Airflow ($m^3/h$) | Fan power (W) | Voltage supply (V) | Internal volume ($dm^3$) | $dm^3$ | Suction (mm) | Liquid (mm) | Suction (") | Liquid (") |
| UP-NEU6212GK-EAE00 | 667HAS6C2FI | CP: 230V-1ph-50Hz Fan: 230V-1ph-50Hz | 3,1 | NEU6212GK-A-CSIR | 958HA51M1AJ | 25 | - | 660 | 807 | 979 | 1174 | 1388 | 1619 | 1863 | - | 417 | 452 | | 484 | 514 | 544 | 572 | 601 | COP | 1,73 | 982 | 484 | 600 | 67 | 28 | 59 | 1 | 350 | 1695 | 67 | 230/1/50 | 0,23 | 1,6 | 10 | 6 | 3/8 | 1/4 |
| | | | | | | 32 | - | 577 | 713 | 869 | 1045 | 1237 | 1442 | 1657 | - | 427 | 466 | | 503 | 539 | 574 | 610 | 646 | | | | | | | | | | | | | | | | | | | |
| | | | | | | 38 | - | 506 | 631 | 774 | 933 | 1105 | 1288 | 1477 | - | 437 | 480 | | 521 | 562 | 604 | 645 | 688 | | | | | | | | | | | | | | | | | | | |
| | | | | | | 43 | - | - | 564 | 696 | 841 | 996 | 1159 | 1327 | - | - | 493 | | 538 | 584 | 629 | 676 | 724 | | | | | | | | | | | | | | | | | | | |
| UP-NEU6215GK-EAE00 | 669NAS6C4FI | CP: 230V-1ph-50Hz Fan: 230V-1ph-50Hz | 2,8 | NEU6215GK-A-CSR | 959NA5190AF | 25 | - | 887 | 1078 | 1296 | 1536 | 1794 | 2068 | 2352 | - | 504 | 559 | | 613 | 669 | 726 | 787 | 853 | COP | 1,82 | 982 | 484 | 600 | 67 | 28 | 59 | 1 | 350 | 1695 | 67 | 230/1/50 | 0,23 | 1,6 | 10 | 6 | 3/8 | 1/4 |
| | | | | | | 32 | - | 783 | 956 | 1152 | 1369 | 1602 | 1847 | 2101 | - | 522 | 578 | | 636 | 697 | 762 | 832 | 909 | | | | | | | | | | | | | | | | | | | |
| | | | | | | 38 | - | 692 | 850 | 1029 | 1226 | 1437 | 1659 | 1887 | - | 535 | 595 | | 658 | 725 | 797 | 877 | 965 | | | | | | | | | | | | | | | | | | | |
| | | | | | | 43 | - | - | 763 | 928 | 1109 | 1302 | 1504 | 1712 | - | - | 609 | | 677 | 750 | 830 | 919 | 1017 | | | | | | | | | | | | | | | | | | | |
| UP-NT6222GK-EAE00 | 602CAS6C4FI | CP: 230V-1ph-50Hz Fan: 230V-1ph-50Hz | 4,3 | NT6222GK-A-CSR | 922CA0404AF | 25 | - | 1056 | 1301 | 1573 | 1868 | 2184 | 2518 | 2865 | - | 742 | 787 | | 845 | 914 | 991 | 1074 | 1158 | COP | 1,6 | 982 | 484 | 600 | 69 | 29 | 60 | 1 | 350 | 1695 | 67 | 230/1/50 | 0,23 | 1,6 | 12 | 8 | 1/2 | 3/8 |
| | | | | | | 32 | - | 922 | 1139 | 1378 | 1637 | 1915 | 2208 | 2516 | - | 756 | 811 | | 860 | 950 | 1029 | 1111 | 1193 | | | | | | | | | | | | | | | | | | | |
| | | | | | | 38 | - | - | 1000 | 1211 | 1440 | 1685 | 1945 | 2218 | - | - | 836 | | 905 | 980 | 1058 | 1138 | 1215 | | | | | | | | | | | | | | | | | | | |
| | | | | | | 43 | - | - | - | 1076 | 1279 | 1497 | 1729 | 1974 | - | - | - | | 928 | 1003 | 1079 | 1155 | 1227 | | | | | | | | | | | | | | | | | | | |
| UP-NT6224GK-EAE00 | 622RAS6C4FI | CP: 230V-1ph-50Hz Fan: 230V-1ph-50Hz | 4,5 | NT6224GK-A-CSR | 922RA0404AF | 25 | - | 1278 | 1609 | 1976 | 2375 | 2799 | 3245 | 3707 | - | 801 | 868 | | 937 | 1010 | 1086 | 1167 | 1252 | COP | 1,79 | 982 | 484 | 600 | 69 | 29 | 60 | 1 | 350 | 1523 | 67 | 230/1/50 | 0,45 | 2,3 | 12 | 8 | 1/2 | 3/8 |
| | | | | | | 32 | - | 1136 | 1420 | 1740 | 2090 | 2468 | 2867 | 3285 | - | 821 | 896 | | 973 | 1055 | 1140 | 1230 | 1324 | | | | | | | | | | | | | | | | | | | |
| | | | | | | 38 | - | 1005 | 1254 | 1538 | 1853 | 2195 | 2560 | 2943 | - | 843 | 923 | | 1007 | 1095 | 1187 | 1283 | 1383 | | | | | | | | | | | | | | | | | | | |
| | | | | | | 43 | - | - | 1120 | 1378 | 1667 | 1982 | 2320 | 2677 | - | - | 948 | | 1037 | 1129 | 1225 | 1325 | 1430 | | | | | | | | | | | | | | | | | | | |
| UP-NT6226GK-EAE00 | 603BAS6C4FI | CP: 230V-1ph-50Hz Fan: 230V-1ph-50Hz | 4,8 | NT6226GK-A-CSR | 923BA0204AF | 25 | - | 1420 | 1761 | 2146 | 2569 | 3024 | 3503 | 4000 | - | 823 | 901 | | 983 | 1070 | 1162 | 1261 | 1369 | COP | 1,84 | 982 | 484 | 600 | 69 | 29 | 60 | 1 | 350 | 1523 | 67 | 230/1/50 | 0,45 | 2,3 | 12 | 8 | 1/2 | 3/8 |
| | | | | | | 32 | - | 1243 | 1545 | 1889 | 2267 | 2674 | 3103 | 3548 | - | 854 | 939 | | 1028 | 1121 | 1220 | 1326 | 1441 | | | | | | | | | | | | | | | | | | | |
| | | | | | | 38 | - | 1097 | 1367 | 1676 | 2016 | 2383 | 2771 | 3173 | - | 882 | 973 | | 1067 | 1166 | 1271 | 1383 | 1504 | | | | | | | | | | | | | | | | | | | |
| | | | | | | 43 | - | - | 1232 | 1512 | 1821 | 2155 | 2508 | 2874 | - | - | 1000 | | 1099 | 1203 | 1314 | 1431 | 1557 | | | | | | | | | | | | | | | | | | | |
| UP-NJ9232GK-EAE00 | 643NAS6C4FI | CP: 230V-1ph-50Hz Fan: 230V-1ph-50Hz | 5,7 | NJ9232GK-A-CSR | 943NA1104AF | 25 | - | 1476 | 1889 | 2342 | 2828 | 3339 | 3867 | 4407 | - | 1015 | 1113 | | 1214 | 1320 | 1432 | 1555 | 1690 | COP | 1,64 | 982 | 484 | 600 | 76 | 30 | 61 | 1 | 350 | 1523 | 67 | 230/1/50 | 0,45 | 2,3 | 16 | 8 | 5/8 | 3/8 |
| | | | | | | 32 | - | 1245 | 1614 | 2021 | 2459 | 2920 | 3399 | 3888 | - | 1007 | 1115 | | 1227 | 1344 | 1470 | 1606 | 1755 | | | | | | | | | | | | | | | | | | | |
| | | | | | | 38 | - | 1052 | 1380 | 1745 | 2141 | 2560 | 2995 | 3439 | - | 1002 | 1117 | | 1236 | 1362 | 1498 | 1644 | 1804 | | | | | | | | | | | | | | | | | | | |
| | | | | | | 43 | - | - | - | 1521 | 1880 | 2262 | 2659 | 3066 | - | - | - | | 1242 | 1374 | 1516 | 1670 | 1838 | | | | | | | | | | | | | | | | | | | |
| UP-NJ9232GS-EAE00 | 647NMS6C3FI | CP: 400V-3ph-50Hz Fan: 230V-1ph-50Hz | 2,1 | NJ9232GS-M | 947NM1101AA | 25 | - | 1553 | 1956 | 2426 | 2951 | 3517 | 4112 | 4721 | - | 920 | 1025 | | 1129 | 1236 | 1352 | 1479 | 1624 | COP | 1,85 | 982 | 484 | 600 | 76 | 30 | 61 | 1 | 350 | 1523 | 67 | 230/1/50 | 0,45 | 2,3 | 16 | 8 | 5/8 | 8 |
| | | | | | | 32 | - | 1352 | 1715 | 2137 | 2606 | 3111 | 3639 | 4178 | - | 914 | 1031 | | 1150 | 1275 | 1409 | 1558 | 1724 | | | | | | | | | | | | | | | | | | | |
| | | | | | | 38 | - | 1180 | 1507 | 1888 | 2310 | 2763 | 3234 | 3713 | - | 914 | 1040 | | 1170 | 1308 | 1458 | 1622 | 1806 | | | | | | | | | | | | | | | | | | | |
| | | | | | | 43 | - | - | - | 1685 | 2067 | 2476 | 2901 | 3330 | - | - | - | | 1188 | 1336 | 1496 | 1673 | 1870 | | | | | | | | | | | | | | | | | | | |
| UP-NTU6238GKV-EAE00 | 605EAS6C4FI | CP: 230V-1ph-50Hz Fan: 230V-1ph-50Hz | 5,6 | NTU6238GKV-A-CSR | 925EA6004AF | 25 | - | 1819 | 2198 | 2656 | 3168 | 3708 | 4255 | 4788 | - | 961 | 1042 | | 1124 | 1210 | 1301 | 1400 | 1508 | COP | 1,97 | 982 | 484 | 600 | 76 | 30 | 61 | 1 | 350 | 1523 | 67 | 230/1/50 | 0,45 | 2,3 | 16 | 8 | 5/8 | 3/8 |
| | | | | | | 32 | - | 1612 | 1946 | 2349 | 2799 | 3272 | 3746 | 4203 | - | 1008 | 1099 | | 1192 | 1289 | 1393 | 1505 | 1626 | | | | | | | | | | | | | | | | | | | |
| | | | | | | 38 | - | - | 1729 | 2085 | 2482 | 2897 | 3310 | 3703 | - | - | 1144 | | 1246 | 1354 | 1468 | 1591 | 1724 | | | | | | | | | | | | | | | | | | | |
| | | | | | | 43 | - | - | - | 1871 | 2223 | 2590 | 2951 | 3290 | - | - | - | | 1288 | 1404 | 1527 | 1659 | 1801 | | | | | | | | | | | | | | | | | | | |
| UP-NJ9238GS-EAE00 | 647RMS6C3FI | CP: 400V-3ph-50Hz Fan: 230V-1ph-50Hz | 2,9 | NJ9238GS-M | 947RM1101AA | 25 | - | 1946 | 2429 | 2949 | 3499 | 4074 | 4668 | 5274 | - | 1108 | 1230 | | 1354 | 1483 | 1624 | 1780 | 1957 | COP | 1,87 | 982 | 484 | 600 | 76 | 30 | 61 | 1 | 350 | 1523 | 67 | 230/1/50 | 0,45 | 2,3 | 16 | 8 | 5/8 | 3/8 |
| | | | | | | 32 | - | 1687 | 2112 | 2574 | 3068 | 3586 | 4124 | 4674 | - | 1102 | 1238 | | 1377 | 1525 | 1685 | 1862 | 2062 | | | | | | | | | | | | | | | | | | | |
| | | | | | | 38 | - | - | 1844 | 2256 | 2700 | 3170 | 3660 | 4163 | - | - | 1248 | | 1399 | 1560 | 1735 | 1929 | 2148 | | | | | | | | | | | | | | | | | | | |
| | | | | | | 43 | - | - | - | 1998 | 2401 | 2831 | 3281 | - | - | - | - | | 1417 | 1588 | 1775 | 1982 | - | | | | | | | | | | | | | | | | | | | |
| UP-NJX6250GS-EAE00 | 645BSS6C3FI | CP: 400V-3ph-50Hz Fan: 230V-1ph-50Hz | 3,4 | NJX6250GS-M | 945BS2101AA | 25 | - | 2621 | 3178 | 3821 | 4533 | 5299 | 6103 | 6930 | - | 1413 | 1564 | | 1722 | 1891 | 2071 | 2264 | 2470 | COP | 1,88 | 1082 | 490 | 708 | 88 | 34 | 65 | 1 | 400 | 2673 | 120 | 230/1/50 | 0,71 | 3,9 | 16 | 10 | 5/8 | 3/8 |
| | | | | | | 32 | - | 2336 | 2833 | 3404 | 4035 | 4712 | 5420 | 6146 | - | 1483 | 1646 | | 1817 | 1998 | 2191 | 2396 | 2615 | | | | | | | | | | | | | | | | | | | |
| | | | | | | 38 | - | 2080 | 2530 | 3043 | 3608 | 4211 | 4839 | 5480 | - | 1525 | 1705 | | 1892 | 2088 | 2296 | 2516 | 2750 | | | | | | | | | | | | | | | | | | | |
| | | | | | | 43 | - | - | - | 2744 | 3255 | 3798 | 4360 | 4931 | - | - | - | | 1953 | 2165 | 2389 | 2625 | 2874 | | | | | | | | | | | | | | | | | | | |
| UP-SE6015GK-EAE00 | 6S1ACS6C4FI | CP: 230V-1ph-50Hz Fan: 230V-1ph-50Hz | 8,5 | SE6015GK-C | 301AC1104AA | 25 | 2330 | 2848 | 3445 | 4125 | 4887 | 5730 | 6649 | 7642 | 1469 | 1580 | 1702 | | 1833 | 1972 | 2116 | 2264 | 2414 | COP | 1,86 | 1082 | 490 | 708 | 92 | 33 | 64 | 1 | 400 | 2673 | 120 | 230/1/50 | 0,71 | 3,9 | 18 | 12 | 5/8 | 1/2 |
| | | | | | | 32 | 2095 | 2578 | 3128 | 3746 | 4436 | 5195 | 6023 | 6917 | 1620 | 1742 | 1876 | | 2020 | 2172 | 2329 | 2490 | 2653 | | | | | | | | | | | | | | | | | | | |
| | | | | | | 38 | 1874 | 2329 | 2838 | 3406 | 4034 | 4723 | 5473 | 6283 | 1768 | 1899 | 2043 | | 2197 | 2359 | 2527 | 2699 | 2872 | | | | | | | | | | | | | | | | | | | |
| | | | | | | 43 | - | - | 2581 | 3107 | 3685 | 4317 | 5003 | 5743 | - | - | 2198 | | 2360 | 2530 | 2707 | 2887 | 3069 | | | | | | | | | | | | | | | | | | | |
| UP-SE6015GS-EAE00 | 6S1AOS6C3FI | CP: 400V-3ph-50Hz Fan: 230V-1ph-50Hz | 3,2 | SE6015GS-O | 301AO1101AA | 25 | 2331 | 2849 | 3448 | 4128 | 4891 | 5735 | 6656 | 7649 | 1445 | 1554 | 1673 | | 1802 | 1938 | 2080 | 2225 | 2372 | COP | 1,89 | 1082 | 490 | 708 | 92 | 33 | 64 | 1 | 400 | 2673 | 120 | 230/1/50 | 0,71 | 3,9 | 18 | 12 | 3/4 | 1/2 |
| | | | | | | 32 | 2097 | 2580 | 3130 | 3750 | 4440 | 5201 | 6030 | 6925 | 1593 | 1713 | 1845 | | 1986 | 2134 | 2288 | 2446 | 2606 | | | | | | | | | | | | | | | | | | | |
| | | | | | | 38 | 1876 | 2332 | 2842 | 3410 | 4039 | 4729 | 5481 | 6293 | 1738 | 1867 | 2008 | | 2159 | 2318 | 2483 | 2651 | 2822 | | | | | | | | | | | | | | | | | | | |
| | | | | | | 43 | - | - | 2585 | 3112 | 3691 | 4324 | 5012 | 5754 | - | - | 2160 | | 2319 | 2486 | 2659 | 2836 | 3014 | | | | | | | | | | | | | | | | | | | |
| UP-SE6018GK-EAE00 | 6S1BCS6C4FI | CP: 230V-1ph-50Hz Fan: 230V-1ph-50Hz | 10,2 | SE6018GK-C | 301BC1104AA | 25 | 2779 | 3396 | 4108 | 4918 | 5824 | 6826 | 7919 | 9096 | 1695 | 1825 | 1968 | | 2122 | 2285 | 2454 | 2628 | 2805 | COP | 1,91 | 1082 | 490 | 708 | 92 | 33 | 64 | 1 | 400 | 2545 | 120 | 230/1/50 | 0,91 | 3,9 | 18 | 12 | 3/4 | 1/2 |
| | | | | | | 32 | 2499 | 3075 | 3729 | 4466 | 5286 | 6189 | 7173 | 8234 | 1871 | 2015 | 2172 | | 2340 | 2518 | 2702 | 2891 | 3083 | | | | | | | | | | | | | | | | | | | |
| | | | | | | 38 | 2235 | 2778 | 3385 | 4060 | 4807 | 5627 | 6518 | 7479 | 2044 | 2198 | 2366 | | 2547 | 2736 | 2933 | 3135 | 3339 | | | | | | | | | | | | | | | | | | | |
| | | | | | | 43 | - | - | 3078 | 3704 | 4392 | 5143 | 5958 | 6837 | - | - | 2546 | | 2736 | 2936 | 3142 | 3354 | 3567 | | | | | | | | | | | | | | | | | | | |
| UP-SE6018GS-EAE00 | 6S1BOS6C3FI | CP: 400V-3ph-50Hz Fan: 230V-1ph-50Hz | 4,7 | SE6018GS-O | 301BO1101AA | 25 | 2784 | 3402 | 4116 | 4928 | 5837 | 6843 | 7940 | 9122 | 1616 | 1739 | 1874 | | 2020 | 2174 | 2334 | 2499 | 2666 | COP | 2,02 | 1082 | 490 | 708 | 92 | 33 | 64 | 1 | 400 | 2545 | 120 | 230/1/50 | 0,91 | 3,9 | 18 | 12 | 3/4 | 1/2 |
| | | | | | | 32 | 2505 | 3082 | 3739 | 4478 | 5301 | 6208 | 7197 | 8263 | 1782 | 1918 | 2067 | | 2226 | 2394 | 2569 | 2748 | 2929 | | | | | | | | | | | | | | | | | | | |
| | | | | | | 38 | 2242 | 2786 | 3395 | 4073 | 4824 | 5648 | 6545 | 7512 | 1945 | 2091 | 2251 | | 2422 | 2601 | 2788 | 2978 | 3171 | | | | | | | | | | | | | | | | | | | |
| | | | | | | 43 | - | - | 3090 | 3719 | 4411 | 5166 | 5987 | 6873 | - | - | 2421 | | 2601 | 2790 | 2985 | 3185 | 3387 | | | | | | | | | | | | | | | | | | | |
| UP-SE6021GS-EAE00 | 6S1COS6C3FI | CP: 400V-3ph-50Hz Fan: 230V-1ph-50Hz | 4,9 | SE6021GS-O | 301CO1101AA | 25 | 3132 | 3821 | 4613 | 5508 | 6504 | 7597 | 8780 | 10046 | 1801 | 1943 | 2101 | | 2272 | 2454 | 2645 | 2842 | 3044 | COP | 2 | 1082 | 490 | 708 | 92 | 33 | 64 | 1 | 400 | 2545 | 120 | 230/1/50 | 0,91 | 3,9 | 18 | 12 | 3/4 | 1/2 |
| | | | | | | 32 | 2811 | 3455 | 4182 | 4996 | 5896 | 6879 | 7943 | 9081 | 1988 | 2145 | 2317 | | 2503 | 2701 | 2907 | 3120 | 3336 | | | | | | | | | | | | | | | | | | | |
| | | | | | | 38 | - | 3116 | 3789 | 4535 | 5353 | 6245 | 7207 | 8237 | - | 2339 | 2524 | | 2723 | 2933 | 3152 | 3377 | 3606 | | | | | | | | | | | | | | | | | | | |
| | | | | | | 43 | - | - | 3440 | 4130 | 4882 | 5698 | 6577 | 7518 | - | - | 2716 | | 2925 | 3145 | 3373 | 3609 | 3848 | | | | | | | | | | | | | | | | | | | |
| UP-SE6026GS-EAE00 | 6S1GOS6C3FI | CP: 400V-3ph-50Hz Fan: 230V-1ph-50Hz | 6,2 | SE6026GS-O | 301GO1101AA | 25 | 4049 | 4955 | 6007 | 7212 | 8571 | 10084 | 11747 | 13554 | 2286 | 2451 | 2631 | | 2823 | 3024 | 3232 | 3444 | 3656 | SEPR | 3,12 | 1277 | 538 | 1005 | 107 | 36 | 67 | 1 | 500 | 5195 | 220 | 230/1/50 | 1,34 | 6 | 22 | 16 | 7/8 | 5/8 |
| | | | | | | 32 | 3652 | 4499 | 5468 | 6567 | 7800 | 9169 | 10672 | 12306 | 2516 | 2698 | 2897 | | 3108 | 3329 | 3558 | 3789 | 4022 | | | | | | | | | | | | | | | | | | | |
| | | | | | | 38 | 3280 | 4079 | 4980 | 5990 | 7117 | 8364 | 9732 | 11218 | 2741 | 2937 | 3150 | | 3377 | 3615 | 3859 | 4108 | 4357 | | | | | | | | | | | | | | | | | | | |
| | | | | | | 43 | - | 3702 | 4547 | 5486 | 6526 | 7673 | 8929 | 10294 | - | 3159 | 3384 | | 3623 | 3874 | 4131 | 4393 | 4655 | | | | | | | | | | | | | | | | | | | |
| UP-SE6030GS-EAE00 | 6S1DOS6C3FI | CP: 400V-3ph-50Hz Fan: 230V-1ph-50Hz | 6,6 | SE6030GS-O | 301DO1101AA | 25 | 4548 | 5559 | 6728 | 8058 | 9551 | 11204 | 13008 | 14957 | 2510 | 2697 | 2903 | | 3125 | 3359 | 3602 | 3851 | 4104 | SEPR | 3,14 | 1277 | 538 | 1005 | 107 | 36 | 67 | 1 | 500 | 5195 | 220 | 230/1/50 | 1,34 | 6 | 22 | 16 | 7/8 | 5/8 |
| | | | | | | 32 | 4096 | 5040 | 6116 | 7329 | 8681 | 10174 | 11802 | 13561 | 2765 | 2971 | 3197 | | 3440 | 3695 | 3960 | 4231 | 4505 | | | | | | | | | | | | | | | | | | | |
| | | | | | | 38 | 3671 | 4561 | 5560 | 6674 | 7909 | 9266 | 10745 | 12342 | 3013 | 3235 | 3478 | | 3737 | 4010 | 4293 | 4582 | 4874 | | | | | | | | | | | | | | | | | | | |
| | | | | | | 43 | - | - | 5067 | 6101 | 7239 | 8485 | 9841 | 11305 | - | - | 3737 | | 4010 | 4297 | 4594 | 4897 | 5202 | | | | | | | | | | | | | | | | | | | |
| UP-SE6036GS-EAE00 | 6S1EOS6C3FI | CP: 400V-3ph-50Hz Fan: 230V-1ph-50Hz | 7,6 | SE6036GS-O | 301EO1101AA | 25 | 5636 | 6895 | 8357 | 10028 | 11911 | 14006 | 16305 | 18801 | 2950 | 3169 | 3408 | | 3664 | 3933 | 4211 | 4494 | 4779 | SEPR | 3,35 | 1277 | 538 | 1005 | 107 | 36 | 67 | 1 | 500 | 4739 | 220 | 230/1/50 | 2,23 | 6 | 22 | 16 | 7/8 | 5/8 |
| | | | | | | 32 | 5083 | 6261 | 7608 | 9133 | 10842 | 12737 | 14816 | 17072 | 3254 | 3495 | 3759 | | 4040 | 4335 | 4639 | 4948 | 5260 | | | | | | | | | | | | | | | | | | | |
| | | | | | | 38 | 4566 | 5677 | 6928 | 8331 | 9894 | 11620 | 13512 | 15566 | 3550 | 3809 | 4093 | | 4394 | 4710 | 5036 | 5367 | 5700 | | | | | | | | | | | | | | | | | | | |
| | | | | | | 43 | - | 5152 | 6327 | 7630 | 9073 | 10662 | 12399 | 14286 | - | 4102 | 4401 | | 4719 | 5051 | 5394 | 5743 | 6093 | | | | | | | | | | | | | | | | | | | |
| UP-SE6043GS-EAE00 | 6S1FOS6C3FI | CP: 400V-3ph-50Hz Fan: 230V-1ph-50Hz | 8,6 | SE6043GS-O | 301FO1101AA | 25 | 6593 | 8052 | 9733 | 11641 | 13772 | 16122 | 18677 | 21424 | 3520 | 3795 | 4098 | | 4426 | 4772 | 5135 | 5508 | 5888 | SEPR | 3,21 | 1277 | 538 | 1005 | 107 | 36 | 67 | 1 | 500 | 4739 | 220 | 230/1/50 | 2,23 | 6 | 22 | 16 | 7/8 | 5/8 |
| | | | | | | 32 | 5931 | 7293 | 8839 | 10576 | 12506 | 14626 | 16929 | 19405 | 3887 | 4189 | 4521 | | 4878 | 5256 | 5649 | 6052 | 6463 | | | | | | | | | | | | | | | | | | | |
| | | | | | | 38 | 5308 | 6592 | 8026 | 9620 | 11380 | 13306 | 15395 | 17641 | 4245 | 4570 | 4926 | | 5307 | 5710 | 6128 | 6557 | 6991 | | | | | | | | | | | | | | | | | | | |
| | | | | | | 43 | - | - | 7305 | 8783 | 10403 | 12170 | 14083 | 16139 | - | - | 5300 | | 5701 | 6123 | 6561 | 7009 | 7463 | | | | | | | | | | | | | | | | | | | |

embraco

**Note:** *Subject to modification without prior notification.*

GENERAL DATA & PERFORMANCE

# R452A - MBP - SH10K

| CONDENSING UNITS | | | | COMPRESSORS | | AMBIENT TEMP. | EN13125 - SUBCOOLING 0K - MIDPOINT COOLING CAPACITY (W) | | | | | | | | POWER INPUT (W) | | | | | | | | ECO DESIGN | | DIMENSIONS (mm) | | | WEIGHT | ACOUSTICS dB (A) | | CONDENSER/FAN | | | | | | LIQUID RECEIVER | CONNECTION DIAMETERS | | | |
|---|---|---|---|---|---|---|---|---|---|---|---|---|---|---|---|---|---|---|---|---|---|---|---|---|---|---|---|---|---|---|---|---|---|---|---|---|---|---|---|---|---|
| CONDENSING UNITS MODELS | CONDENSING UNIT BOM | VOLTAGE SUPPLY (V) | I NOM (A) | COMPRESSOR MODELS | COMPRESSOR BOM | (°C) | -25°C | -20°C | -15°C | -10°C | -5°C | 0°C | +5°C | +10°C | -25°C | -20°C | -15°C | | -10°C | -5°C | 0°C | +5°C | +10°C | Type | Cop/ Seer | W (width) | D (depth) | H (height) | Net (kg) | Sound Press. @10m | Sound power level | Number of fan | Fan diameter (mm) | Airflow ($m^3/h$) | Fan power (W) | Voltage supply (V) | Internal volume ($dm^3$) | $dm^3$ | Suction (mm) | Liquid (mm) | Suction (") | Liquid (") |
| UP-NEU6212GK-EAE00 | 667HAS6C2FI | CP: 230V-1ph-50Hz Fan: 230V-1ph-50Hz | 3,1 | NEU6212GK-A-CSIR | 958HA51M1AJ | 25 | - | 627 | 773 | 947 | 1147 | 1368 | 1610 | 1869 | - | 414 | 448 | | 480 | 511 | 541 | 571 | 602 | - | - | 982 | 484 | 600 | 67 | 28 | 59 | 1 | 350 | 1695 | 67 | 230/1/50 | 0,23 | 1,6 | 10 | 6 | 3/8 | 1/4 |
| | | | | | | 32 | - | 540 | 675 | 834 | 1014 | 1214 | 1431 | 1662 | - | 423 | 461 | | 498 | 535 | 571 | 608 | 647 | | | | | | | | | | | | | | | | | | | |
| | | | | | | 38 | - | 466 | 590 | 734 | 898 | 1079 | 1274 | 1482 | - | 432 | 474 | | 515 | 557 | 599 | 643 | 689 | | | | | | | | | | | | | | | | | | | |
| | | | | | | 43 | - | - | 520 | 653 | 803 | 967 | 1144 | 1331 | - | - | 486 | | 531 | 577 | 624 | 673 | 725 | | | | | | | | | | | | | | | | | | | |
| UP-NEU6215GK-EAE00 | 669NAS6C4FI | CP: 230V-1ph-50Hz Fan: 230V-1ph-50Hz | 2,8 | NEU6215GK-A-CSR | 959NA5190AF | 25 | - | 840 | 1031 | 1252 | 1497 | 1766 | 2055 | 2359 | - | 499 | 553 | | 608 | 664 | 722 | 785 | 854 | - | - | 982 | 484 | 600 | 67 | 28 | 59 | 1 | 350 | 1695 | 67 | 230/1/50 | 0,23 | 1,6 | 10 | 6 | 3/8 | 1/4 |
| | | | | | | 32 | - | 731 | 903 | 1102 | 1325 | 1569 | 1831 | 2108 | - | 515 | 571 | | 629 | 691 | 757 | 829 | 910 | | | | | | | | | | | | | | | | | | | |
| | | | | | | 38 | - | 636 | 792 | 974 | 1177 | 1400 | 1639 | 1892 | - | 528 | 587 | | 649 | 717 | 791 | 873 | 966 | | | | | | | | | | | | | | | | | | | |
| | | | | | | 43 | - | - | 702 | 869 | 1056 | 1261 | 1482 | 1716 | - | - | 600 | | 667 | 741 | 823 | 914 | 1018 | | | | | | | | | | | | | | | | | | | |
| UP-NT6222GK-EAE00 | 602CAS6C4FI | CP: 230V-1ph-50Hz Fan: 230V-1ph-50Hz | 4,3 | NT6222GK-A-CSR | 922CA0404AF | 25 | - | 999 | 1242 | 1516 | 1818 | 2145 | 2494 | 2865 | - | 735 | 779 | | 837 | 906 | 984 | 1069 | 1158 | - | - | 982 | 484 | 600 | 69 | 29 | 60 | 1 | 350 | 1695 | 67 | 230/1/50 | 0,23 | 1,6 | 12 | 8 | 1/2 | 3/8 |
| | | | | | | 32 | - | 860 | 1074 | 1316 | 1582 | 1871 | 2183 | 2514 | - | 747 | 801 | | 866 | 940 | 1021 | 1106 | 1193 | | | | | | | | | | | | | | | | | | | |
| | | | | | | 38 | - | - | 931 | 1144 | 1380 | 1638 | 1917 | 2216 | - | - | 824 | | 892 | 968 | 1049 | 1132 | 1214 | | | | | | | | | | | | | | | | | | | |
| | | | | | | 43 | - | - | - | 1006 | 1216 | 1447 | 1699 | 1971 | - | - | - | | 914 | 990 | 1069 | 1149 | 1226 | | | | | | | | | | | | | | | | | | | |
| UP-NT6224GK-EAE00 | 622RAS6C4FI | CP: 230V-1ph-50Hz Fan: 230V-1ph-50Hz | 4,5 | NT6224GK-A-CSR | 922RA0404AF | 25 | - | 1210 | 1540 | 1911 | 2317 | 2757 | 3225 | 3720 | - | 793 | 859 | | 929 | 1002 | 1080 | 1164 | 1254 | - | - | 982 | 484 | 600 | 69 | 29 | 60 | 1 | 350 | 1523 | 67 | 230/1/50 | 0,45 | 2,3 | 12 | 8 | 1/2 | 3/8 |
| | | | | | | 32 | - | 1061 | 1343 | 1666 | 2025 | 2419 | 2843 | 3296 | - | 811 | 885 | | 963 | 1045 | 1133 | 1226 | 1325 | | | | | | | | | | | | | | | | | | | |
| | | | | | | 38 | - | 924 | 1170 | 1457 | 1781 | 2140 | 2531 | 2951 | - | 831 | 911 | | 995 | 1083 | 1177 | 1278 | 1384 | | | | | | | | | | | | | | | | | | | |
| | | | | | | 43 | - | - | 1031 | 1291 | 1589 | 1922 | 2287 | 2683 | - | - | 934 | | 1022 | 1115 | 1214 | 1319 | 1431 | | | | | | | | | | | | | | | | | | | |
| UP-NT6226GK-EAE00 | 603BAS6C4FI | CP: 230V-1ph-50Hz Fan: 230V-1ph-50Hz | 4,8 | NT6226GK-A-CSR | 923BA0204AF | 25 | - | 1345 | 1685 | 2074 | 2506 | 2977 | 3481 | 4012 | - | 814 | 892 | | 974 | 1061 | 1155 | 1258 | 1371 | - | - | 982 | 484 | 600 | 69 | 29 | 60 | 1 | 350 | 1523 | 67 | 230/1/50 | 0,45 | 2,3 | 12 | 8 | 1/2 | 3/8 |
| | | | | | | 32 | - | 1160 | 1461 | 1807 | 2195 | 2619 | 3075 | 3558 | - | 843 | 928 | | 1016 | 1110 | 1211 | 1322 | 1443 | | | | | | | | | | | | | | | | | | | |
| | | | | | | 38 | - | 1007 | 1275 | 1586 | 1937 | 2322 | 2739 | 3181 | - | 869 | 959 | | 1053 | 1153 | 1260 | 1378 | 1506 | | | | | | | | | | | | | | | | | | | |
| | | | | | | 43 | - | - | 1131 | 1414 | 1734 | 2088 | 2472 | 2881 | - | - | 984 | | 1083 | 1188 | 1302 | 1424 | 1558 | | | | | | | | | | | | | | | | | | | |
| UP-NJ9232GK-EAE00 | 643NAS6C4FI | CP: 230V-1ph-50Hz Fan: 230V-1ph-50Hz | 5,7 | NJ9232GK-A-CSR | 943NA1104AF | 25 | - | 1399 | 1808 | 2262 | 2756 | 3284 | 3841 | 4420 | - | 1005 | 1103 | | 1203 | 1309 | 1424 | 1550 | 1692 | - | - | 982 | 484 | 600 | 76 | 30 | 61 | 1 | 350 | 1523 | 67 | 230/1/50 | 0,45 | 2,3 | 16 | 8 | 5/8 | 3/8 |
| | | | | | | 32 | - | 1164 | 1527 | 1934 | 2380 | 2860 | 3367 | 3897 | - | 996 | 1102 | | 1214 | 1332 | 1460 | 1601 | 1757 | | | | | | | | | | | | | | | | | | | |
| | | | | | | 38 | - | 968 | 1288 | 1654 | 2057 | 2495 | 2959 | 3446 | - | 989 | 1102 | | 1221 | 1348 | 1486 | 1637 | 1805 | | | | | | | | | | | | | | | | | | | |
| | | | | | | 43 | - | - | 1098 | 1426 | 1793 | 2193 | 2622 | 3072 | - | - | - | | 1226 | 1359 | 1504 | 1663 | 1838 | | | | | | | | | | | | | | | | | | | |
| UP-NJ9232GS-EAE00 | 647NMS6C3FI | CP: 400V-3ph-50Hz Fan: 230V-1ph-50Hz | 2,1 | NJ9232GS-M | 947NM1101AA | 25 | - | 1469 | 1870 | 2341 | 2875 | 3459 | 4082 | 4734 | - | 912 | 1016 | | 1119 | 1226 | 1343 | 1474 | 1627 | - | - | 982 | 484 | 600 | 76 | 30 | 61 | 1 | 350 | 1523 | 67 | 230/1/50 | 0,45 | 2,3 | 16 | 8 | 5/8 | 8 |
| | | | | | | 32 | - | 1261 | 1620 | 2042 | 2521 | 3045 | 3604 | 4188 | - | 904 | 1020 | | 1138 | 1262 | 1398 | 1551 | 1726 | | | | | | | | | | | | | | | | | | | |
| | | | | | | 38 | - | 1084 | 1405 | 1785 | 2217 | 2690 | 3195 | 3722 | - | 902 | 1026 | | 1156 | 1294 | 1445 | 1614 | 1807 | | | | | | | | | | | | | | | | | | | |
| | | | | | | 43 | - | - | - | 1576 | 1968 | 2399 | 2858 | 3337 | - | - | - | | 1171 | 1319 | 1482 | 1664 | 1871 | | | | | | | | | | | | | | | | | | | |
| UP-NTU6238GKV-EAE00 | 605EAS6C4FI | CP: 230V-1ph-50Hz Fan: 230V-1ph-50Hz | 5,6 | NTU6238GKV-A-CSR | 925EA6004AF | 25 | - | 1718 | 2099 | 2562 | 3085 | 3646 | 4225 | 4803 | - | 949 | 1029 | | 1111 | 1197 | 1291 | 1395 | 1511 | - | - | 982 | 484 | 600 | 76 | 30 | 61 | 1 | 350 | 1523 | 67 | 230/1/50 | 0,45 | 2,3 | 16 | 8 | 5/8 | 3/8 |
| | | | | | | 32 | - | 1501 | 1835 | 2244 | 2706 | 3201 | 3711 | 4216 | - | 993 | 1083 | | 1175 | 1274 | 1380 | 1498 | 1629 | | | | | | | | | | | | | | | | | | | |
| | | | | | | 38 | - | - | 1608 | 1970 | 2381 | 2820 | 3271 | 3714 | - | - | 1126 | | 1228 | 1336 | 1454 | 1583 | 1725 | | | | | | | | | | | | | | | | | | | |
| | | | | | | 43 | - | - | - | 1747 | 2115 | 2508 | 2909 | 3301 | - | - | - | | 1267 | 1384 | 1511 | 1649 | 1802 | | | | | | | | | | | | | | | | | | | |
| UP-NJ9238GS-EAE00 | 647RMS6C3FI | CP: 400V-3ph-50Hz Fan: 230V-1ph-50Hz | 2,9 | NJ9238GS-M | 947RM1101AA | 25 | - | 1838 | 2319 | 2842 | 3404 | 4002 | 4631 | 5287 | - | 1098 | 1218 | | 1341 | 1470 | 1612 | 1773 | 1959 | - | - | 982 | 484 | 600 | 76 | 30 | 61 | 1 | 350 | 1523 | 67 | 230/1/50 | 0,45 | 2,3 | 16 | 8 | 5/8 | 3/8 |
| | | | | | | 32 | - | 1571 | 1992 | 2457 | 2963 | 3506 | 4081 | 4683 | - | 1089 | 1223 | | 1361 | 1508 | 1670 | 1853 | 2064 | | | | | | | | | | | | | | | | | | | |
| | | | | | | 38 | - | - | 1715 | 2131 | 2588 | 3084 | 3613 | 4170 | - | - | 1230 | | 1380 | 1541 | 1719 | 1919 | 2148 | | | | | | | | | | | | | | | | | | | |
| | | | | | | 43 | - | - | - | 1866 | 2283 | 2739 | 3230 | - | - | - | - | | 1396 | 1568 | 1757 | 1971 | - | | | | | | | | | | | | | | | | | | | |
| UP-NJX6250GS-EAE00 | 645BSS6C3FI | CP: 400V-3ph-50Hz Fan: 230V-1ph-50Hz | 3,4 | NJX6250GS-M | 945BS2101AA | 25 | - | 2472 | 3035 | 3688 | 4418 | 5211 | 6055 | 6937 | - | 1402 | 1548 | | 1704 | 1872 | 2054 | 2253 | 2469 | - | - | 1082 | 490 | 708 | 88 | 34 | 65 | 1 | 400 | 2673 | 120 | 230/1/50 | 0,71 | 3,9 | 16 | 10 | 5/8 | 3/8 |
| | | | | | | 32 | - | 2184 | 2680 | 3256 | 3902 | 4607 | 5358 | 6144 | - | 1461 | 1622 | | 1793 | 1976 | 2172 | 2385 | 2617 | | | | | | | | | | | | | | | | | | | |
| | | | | | | 38 | - | 1913 | 2358 | 2875 | 3456 | 4090 | 4767 | 5476 | - | 1503 | 1681 | | 1867 | 2065 | 2277 | 2505 | 2751 | | | | | | | | | | | | | | | | | | | |
| | | | | | | 43 | - | - | - | 2562 | 3092 | 3671 | 4289 | 4936 | - | - | - | | 1925 | 2138 | 2364 | 2607 | 2867 | | | | | | | | | | | | | | | | | | | |
| UP-SE6015GK-EAE00 | 6S1ACS6C4FI | CP: 230V-1ph-50Hz Fan: 230V-1ph-50Hz | 8,5 | SE6015GK-C | 301AC1104AA | 25 | 2169 | 2688 | 3289 | 3979 | 4761 | 5636 | 6604 | 7663 | 1450 | 1557 | 1677 | | 1807 | 1948 | 2097 | 2254 | 2420 | - | - | 1082 | 490 | 708 | 92 | 33 | 64 | 1 | 400 | 2673 | 120 | 230/1/50 | 0,71 | 3,9 | 18 | 12 | 5/8 | 1/2 |
| | | | | | | 32 | 1927 | 2401 | 2947 | 3572 | 4281 | 5076 | 5959 | 6929 | 1590 | 1710 | 1843 | | 1988 | 2143 | 2307 | 2479 | 2659 | | | | | | | | | | | | | | | | | | | |
| | | | | | | 38 | 1688 | 2128 | 2631 | 3205 | 3856 | 4587 | 5402 | 6300 | 1733 | 1862 | 2004 | | 2159 | 2325 | 2500 | 2683 | 2873 | | | | | | | | | | | | | | | | | | | |
| | | | | | | 43 | 1474 | 1888 | 2358 | 2893 | 3499 | 4180 | 4940 | 5781 | 1867 | 2001 | 2150 | | 2312 | 2485 | 2668 | 2859 | 3056 | | | | | | | | | | | | | | | | | | | |
| UP-SE6015GS-EAE00 | 6S1AOS6C3FI | CP: 400V-3ph-50Hz Fan: 230V-1ph-50Hz | 3,2 | SE6015GS-O | 301AO1101AA | 25 | 2171 | 2690 | 3292 | 3983 | 4765 | 5641 | 6610 | 7671 | 1426 | 1532 | 1649 | | 1777 | 1914 | 2061 | 2215 | 2378 | - | - | 1082 | 490 | 708 | 92 | 33 | 64 | 1 | 400 | 2673 | 120 | 230/1/50 | 0,71 | 3,9 | 18 | 12 | 3/4 | 1/2 |
| | | | | | | 32 | 1929 | 2403 | 2950 | 3576 | 4286 | 5082 | 5966 | 6938 | 1564 | 1681 | 1812 | | 1954 | 2106 | 2267 | 2436 | 2613 | | | | | | | | | | | | | | | | | | | |
| | | | | | | 38 | 1690 | 2130 | 2634 | 3209 | 3861 | 4594 | 5410 | 6310 | 1704 | 1830 | 1970 | | 2122 | 2284 | 2456 | 2636 | 2822 | | | | | | | | | | | | | | | | | | | |
| | | | | | | 43 | 1477 | 1891 | 2362 | 2898 | 3504 | 4187 | 4948 | 5791 | 1835 | 1967 | 2113 | | 2272 | 2442 | 2621 | 2808 | 3002 | | | | | | | | | | | | | | | | | | | |
| UP-SE6018GK-EAE00 | 6S1BCS6C4FI | CP: 230V-1ph-50Hz Fan: 230V-1ph-50Hz | 10,2 | SE6018GK-C | 301BC1104AA | 25 | 2588 | 3206 | 3922 | 4744 | 5674 | 6714 | 7864 | 9121 | 1672 | 1799 | 1939 | | 2092 | 2256 | 2432 | 2617 | 2811 | - | - | 1082 | 490 | 708 | 92 | 33 | 64 | 1 | 400 | 2545 | 120 | 230/1/50 | 0,91 | 3,9 | 18 | 12 | 3/4 | 1/2 |
| | | | | | | 32 | 2299 | 2863 | 3514 | 4258 | 5101 | 6047 | 7096 | 8249 | 1836 | 1977 | 2132 | | 2302 | 2484 | 2676 | 2879 | 3090 | | | | | | | | | | | | | | | | | | | |
| | | | | | | 38 | 2013 | 2537 | 3137 | 3821 | 4595 | 5465 | 6433 | 7501 | 2003 | 2154 | 2320 | | 2502 | 2695 | 2901 | 3116 | 3339 | | | | | | | | | | | | | | | | | | | |
| | | | | | | 43 | 1759 | 2252 | 2812 | 3449 | 4170 | 4980 | 5884 | 6884 | 2159 | 2316 | 2491 | | 2680 | 2882 | 3096 | 3320 | 3552 | | | | | | | | | | | | | | | | | | | |
| UP-SE6018GS-EAE00 | 6S1BOS6C3FI | CP: 400V-3ph-50Hz Fan: 230V-1ph-50Hz | 4,7 | SE6018GS-O | 301BO1101AA | 25 | 2592 | 3212 | 3930 | 4754 | 5687 | 6731 | 7885 | 9148 | 1594 | 1714 | 1847 | | 1991 | 2147 | 2313 | 2488 | 2672 | - | - | 1082 | 490 | 708 | 92 | 33 | 64 | 1 | 400 | 2545 | 120 | 230/1/50 | 0,91 | 3,9 | 18 | 12 | 3/4 | 1/2 |
| | | | | | | 32 | 2305 | 2871 | 3524 | 4271 | 5117 | 6066 | 7120 | 8278 | 1749 | 1882 | 2030 | | 2190 | 2362 | 2545 | 2736 | 2936 | | | | | | | | | | | | | | | | | | | |
| | | | | | | 38 | 2021 | 2547 | 3148 | 3834 | 4612 | 5487 | 6459 | 7532 | 1907 | 2050 | 2208 | | 2379 | 2563 | 2757 | 2961 | 3172 | | | | | | | | | | | | | | | | | | | |
| | | | | | | 43 | 1767 | 2262 | 2825 | 3464 | 4188 | 5003 | 5912 | 6917 | 2055 | 2204 | 2369 | | 2548 | 2740 | 2942 | 3154 | 3374 | | | | | | | | | | | | | | | | | | | |
| UP-SE6021GS-EAE00 | 6S1COS6C3FI | CP: 400V-3ph-50Hz Fan: 230V-1ph-50Hz | 4,9 | SE6021GS-O | 301CO1101AA | 25 | 2916 | 3606 | 4401 | 5308 | 6329 | 7464 | 8712 | 10069 | 1773 | 1912 | 2067 | | 2237 | 2421 | 2619 | 2829 | 3052 | - | - | 1082 | 490 | 708 | 92 | 33 | 64 | 1 | 400 | 2545 | 120 | 230/1/50 | 0,91 | 3,9 | 18 | 12 | 3/4 | 1/2 |
| | | | | | | 32 | 2583 | 3213 | 3934 | 4756 | 5681 | 6714 | 7853 | 9098 | 1949 | 2102 | 2273 | | 2460 | 2662 | 2877 | 3104 | 3343 | | | | | | | | | | | | | | | | | | | |
| | | | | | | 38 | 2258 | 2842 | 3507 | 4261 | 5112 | 6062 | 7115 | 8268 | 2126 | 2290 | 2472 | | 2671 | 2885 | 3112 | 3352 | 3602 | | | | | | | | | | | | | | | | | | | |
| | | | | | | 43 | 1969 | 2519 | 3140 | 3843 | 4635 | 5521 | 6504 | 7586 | 2291 | 2462 | 2652 | | 2859 | 3081 | 3317 | 3565 | 3823 | | | | | | | | | | | | | | | | | | | |
| UP-SE6026GS-EAE00 | 6S1GOS6C3FI | CP: 400V-3ph-50Hz Fan: 230V-1ph-50Hz | 6,2 | SE6026GS-O | 301GO1101AA | 25 | 3769 | 4679 | 5741 | 6965 | 8360 | 9930 | 11677 | 13599 | 2261 | 2421 | 2597 | | 2788 | 2991 | 3205 | 3429 | 3662 | - | - | 1277 | 538 | 1005 | 107 | 36 | 67 | 1 | 500 | 5195 | 220 | 230/1/50 | 1,34 | 6 | 22 | 16 | 7/8 | 5/8 |
| | | | | | | 32 | 3366 | 4199 | 5165 | 6277 | 7544 | 8973 | 10569 | 12333 | 2473 | 2651 | 2849 | | 3061 | 3288 | 3526 | 3775 | 4032 | | | | | | | | | | | | | | | | | | | |
| | | | | | | 38 | 2963 | 3737 | 4629 | 5651 | 6816 | 8133 | 9607 | 11242 | 2690 | 2882 | 3094 | | 3323 | 3566 | 3822 | 4089 | 4363 | | | | | | | | | | | | | | | | | | | |
| | | | | | | 43 | 2600 | 3330 | 4164 | 5117 | 6202 | 7430 | 8807 | 10339 | 2895 | 3096 | 3318 | | 3558 | 3813 | 4081 | 4360 | 4648 | | | | | | | | | | | | | | | | | | | |
| UP-SE6030GS-EAE00 | 6S1DOS6C3FI | CP: 400V-3ph-50Hz Fan: 230V-1ph-50Hz | 6,6 | SE6030GS-O | 301DO1101AA | 25 | 4235 | 5249 | 6426 | 7777 | 9308 | 11024 | 12922 | 15000 | 2478 | 2660 | 2862 | | 3082 | 3318 | 3569 | 3834 | 4112 | - | - | 1277 | 538 | 1005 | 107 | 36 | 67 | 1 | 500 | 5195 | 220 | 230/1/50 | 1,34 | 6 | 22 | 16 | 7/8 | 5/8 |
| | | | | | | 32 | 3771 | 4698 | 5768 | 6994 | 8384 | 9945 | 11679 | 13586 | 2714 | 2917 | 3141 | | 3385 | 3646 | 3923 | 4214 | 4516 | | | | | | | | | | | | | | | | | | | |
| | | | | | | 38 | 3311 | 4172 | 5159 | 6286 | 7565 | 9003 | 10605 | 12373 | 2955 | 3172 | 3413 | | 3674 | 3953 | 4248 | 4556 | 4877 | | | | | | | | | | | | | | | | | | | |
| | | | | | | 43 | 2900 | 3711 | 4634 | 5685 | 6876 | 8217 | 9714 | 11371 | 3180 | 3407 | 3659 | | 3932 | 4223 | 4531 | 4852 | 5185 | | | | | | | | | | | | | | | | | | | |
| UP-SE6036GS-EAE00 | 6S1EOS6C3FI | CP: 400V-3ph-50Hz Fan: 230V-1ph-50Hz | 7,6 | SE6036GS-O | 301EO1101AA | 25 | 5246 | 6511 | 7985 | 9684 | 11617 | 13791 | 16206 | 18862 | 2917 | 3129 | 3363 | | 3617 | 3888 | 4174 | 4475 | 4787 | - | - | 1277 | 538 | 1005 | 107 | 36 | 67 | 1 | 500 | 4739 | 220 | 230/1/50 | 2,23 | 6 | 22 | 16 | 7/8 | 5/8 |
| | | | | | | 32 | 4685 | 5844 | 7185 | 8727 | 10484 | 12463 | 14671 | 17108 | 3196 | 3433 | 3695 | | 3978 | 4279 | 4597 | 4929 | 5273 | | | | | | | | | | | | | | | | | | | |
| | | | | | | 38 | 4125 | 5201 | 6439 | 7858 | 9474 | 11299 | 13339 | 15599 | 3483 | 3737 | 4018 | | 4322 | 4646 | 4986 | 5341 | 5708 | | | | | | | | | | | | | | | | | | | |
| | | | | | | 43 | 3621 | 4636 | 5794 | 7117 | 8623 | 10324 | 12231 | 14350 | 3751 | 4018 | 4312 | | 4631 | 4970 | 5327 | 5698 | 6081 | | | | | | | | | | | | | | | | | | | |
| UP-SE6043GS-EAE00 | 6S1FOS6C3FI | CP: 400V-3ph-50Hz Fan: 230V-1ph-50Hz | 8,6 | SE6043GS-O | 301FO1101AA | 25 | 6140 | 7601 | 9292 | 11227 | 13413 | 15853 | 18544 | 21480 | 3471 | 3738 | 4035 | | 4360 | 4711 | 5086 | 5484 | 5902 | - | - | 1277 | 538 | 1005 | 107 | 36 | 67 | 1 | 500 | 4739 | 220 | 230/1/50 | 2,23 | 6 | 22 | 16 | 7/8 | 5/8 |
| | | | | | | 32 | 5456 | 6792 | 8328 | 10082 | 12066 | 14287 | 16745 | 19440 | 3812 | 4108 | 4438 | | 4797 | 5183 | 5593 | 6026 | 6478 | | | | | | | | | | | | | | | | | | | |
| | | | | | | 38 | 4783 | 6023 | 7439 | 9053 | 10877 | 12923 | 15194 | 17694 | 4159 | 4476 | 4828 | | 5211 | 5622 | 6057 | 6515 | 6991 | | | | | | | | | | | | | | | | | | | |
| | | | | | | 43 | 4183 | 5351 | 6676 | 8179 | 9879 | 11787 | 13910 | 16254 | 4482 | 4813 | 5181 | | 5581 | 6009 | 6462 | 6936 | 7430 | | | | | | | | | | | | | | | | | | | |

embraco

**Note:** *Subject to modification without prior notification.*

GENERAL DATA & PERFORMANCE

# R449A - MBP - RTG20

| CONDENSING UNITS | | | | COMPRESSORS | | AMBIENT TEMP. | EN13125 - SUBCOOLING 0K - MIDPOINT COOLING CAPACITY (W) | | | | | | | | POWER INPUT (W) | | | | | | | | | ECO DESIGN | | DIMENSIONS (mm) | | | WEIGHT | ACOUSTICS dB (A) | | CONDENSER/FAN | | | | | | LIQUID RECEIVER | CONNECTION DIAMETERS | | | |
|---|---|---|---|---|---|---|---|---|---|---|---|---|---|---|---|---|---|---|---|---|---|---|---|---|---|---|---|---|---|---|---|---|---|---|---|---|---|---|---|---|---|---|
| CONDENSING UNITS MODELS | CONDENSING UNIT BOM | VOLTAGE SUPPLY (V) | I NOM (A) | COMPRESSOR MODELS | COMPRESSOR BOM | (°C) | -25°C | -20°C | -15°C | -10°C | -5°C | 0°C | +5°C | +10°C | -25°C | -20°C | -15°C | | -10°C | -5°C | 0°C | +5°C | +10°C | Type | Cop/ Seer | W (width) | D (depth) | H (height) | Net (kg) | Sound Press. @10m | Sound power level | Number of fan | Fan diameter (mm) | Airflow ($m^2$/h) | Fan power (W) | Voltage supply (V) | Internal volume ($dm^3$) | $dm^3$ | Suction (mm) | Liquid (mm) | Suction (") | Liquid (") |
| UP-NEU6212GK-EAE00 | 667HAS6C2FI | CP: 230V-1ph-50Hz Fan: 230V-1ph-50Hz | 3,1 | NEU6212GK-A-CSIR | 958HA51M1AJ | 25 | - | - | 732 | 899 | 1094 | 1317 | 1568 | 1843 | - | - | 438 | | 456 | 473 | 493 | 518 | 552 | COP | 1,76 | 982 | 484 | 600 | 67 | 28 | 59 | 1 | 350 | 1695 | 67 | 230/1/50 | 0,23 | 1,6 | 10 | 6 | 3/8 | 1/4 |
| | | | | | | 32 | - | - | 656 | 819 | 1006 | 1217 | 1449 | 1700 | - | - | 418 | | 453 | 488 | 525 | 565 | 610 | | | | | | | | | | | | | | | | | | | | |
| | | | | | | 38 | - | - | 601 | 754 | 927 | 1119 | 1328 | 1553 | - | - | 432 | | 478 | 521 | 565 | 609 | 655 | | | | | | | | | | | | | | | | | | | | |
| | | | | | | 43 | - | - | - | 694 | 851 | 1024 | 1211 | 1412 | - | - | - | | 504 | 549 | 592 | 635 | 678 | | | | | | | | | | | | | | | | | | | | |
| UP-NEU6215GK-EAE00 | 669NAS6C4FI | CP: 230V-1ph-50Hz Fan: 230V-1ph-50Hz | 2,8 | NEU6215GK-A-CSR | 959NA5190AF | 25 | - | - | 991 | 1210 | 1461 | 1744 | 2056 | 2391 | - | - | 515 | | 562 | 611 | 664 | 721 | 784 | COP | 1,84 | 982 | 484 | 600 | 67 | 28 | 59 | 1 | 350 | 1695 | 67 | 230/1/50 | 0,23 | 1,6 | 10 | 6 | 3/8 | 1/4 |
| | | | | | | 32 | - | - | 895 | 1104 | 1341 | 1603 | 1886 | 2188 | - | - | 535 | | 587 | 643 | 703 | 770 | 845 | | | | | | | | | | | | | | | | | | | | |
| | | | | | | 38 | - | - | 824 | 1016 | 1231 | 1466 | 1719 | 1985 | - | - | 555 | | 612 | 675 | 742 | 818 | 902 | | | | | | | | | | | | | | | | | | | | |
| | | | | | | 43 | - | - | - | - | 1126 | 1334 | 1556 | 1789 | - | - | - | | - | 702 | 777 | 860 | 953 | | | | | | | | | | | | | | | | | | | | |
| UP-NT6222GK-EAE00 | 602CAS6C4FI | CP: 230V-1ph-50Hz Fan: 230V-1ph-50Hz | 4,3 | NT6222GK-A-CSR | 922CA0404AF | 25 | - | - | 1205 | 1485 | 1798 | 2138 | 2502 | 2885 | - | - | - | | - | 851 | 923 | 1000 | 1080 | COP | 1,63 | 982 | 484 | 600 | 69 | 29 | 60 | 1 | 350 | 1695 | 67 | 230/1/50 | 0,23 | 1,6 | 12 | 8 | 1/2 | 3/8 |
| | | | | | | 32 | - | - | 1090 | 1342 | 1619 | 1919 | 2239 | 2574 | - | - | 762 | | 823 | 893 | 968 | 1045 | 1123 | | | | | | | | | | | | | | | | | | | | |
| | | | | | | 38 | - | - | - | 1208 | 1452 | 1716 | 1996 | 2290 | - | - | - | | 854 | 927 | 1003 | 1080 | 1156 | | | | | | | | | | | | | | | | | | | | |
| | | | | | | 43 | - | - | - | - | 1300 | 1533 | 1780 | 2040 | - | - | - | | - | 954 | 1031 | 1107 | 1181 | | | | | | | | | | | | | | | | | | | | |
| UP-NT6224GK-EAE00 | 622RAS6C4FI | CP: 230V-1ph-50Hz Fan: 230V-1ph-50Hz | 4,5 | NT6224GK-A-CSR | 922RA0404AF | 25 | - | - | 1470 | 1834 | 2238 | 2677 | 3147 | 3645 | - | - | 803 | | 865 | 930 | 999 | 1071 | 1147 | COP | 1,79 | 982 | 484 | 600 | 69 | 29 | 60 | 1 | 350 | 1523 | 67 | 230/1/50 | 0,45 | 2,3 | 12 | 8 | 1/2 | 3/8 |
| | | | | | | 32 | - | - | 1335 | 1660 | 2023 | 2420 | 2846 | 3300 | - | - | 837 | | 907 | 981 | 1058 | 1139 | 1224 | | | | | | | | | | | | | | | | | | | | |
| | | | | | | 38 | - | - | 1217 | 1511 | 1840 | 2201 | 2591 | 3007 | - | - | 866 | | 944 | 1024 | 1109 | 1197 | 1290 | | | | | | | | | | | | | | | | | | | | |
| | | | | | | 43 | - | - | - | - | 1680 | 2013 | 2374 | 2759 | - | - | - | | - | 1061 | 1152 | 1248 | 1347 | | | | | | | | | | | | | | | | | | | | |
| UP-NT6226GK-EAE00 | 603BAS6C4FI | CP: 230V-1ph-50Hz Fan: 230V-1ph-50Hz | 4,8 | NT6226GK-A-CSR | 923BA0204AF | 25 | - | - | 1617 | 2012 | 2461 | 2955 | 3488 | 4048 | - | - | 829 | | 901 | 978 | 1061 | 1152 | 1251 | COP | 1,88 | 982 | 484 | 600 | 69 | 29 | 60 | 1 | 350 | 1523 | 67 | 230/1/50 | 0,45 | 2,3 | 12 | 8 | 1/2 | 3/8 |
| | | | | | | 32 | - | - | 1473 | 1832 | 2237 | 2680 | 3154 | 3650 | - | - | 872 | | 951 | 1036 | 1128 | 1226 | 1333 | | | | | | | | | | | | | | | | | | | | |
| | | | | | | 38 | - | - | 1350 | 1675 | 2038 | 2433 | 2853 | 3292 | - | - | 906 | | 993 | 1086 | 1184 | 1290 | 1403 | | | | | | | | | | | | | | | | | | | | |
| | | | | | | 43 | - | - | - | - | 1859 | 2212 | 2586 | 2975 | - | - | - | | - | 1127 | 1232 | 1344 | 1464 | | | | | | | | | | | | | | | | | | | | |
| UP-NJ9232GK-EAE00 | 643NAS6C4FI | CP: 230V-1ph-50Hz Fan: 230V-1ph-50Hz | 5,7 | NJ9232GK-A-CSR | 943NA1104AF | 25 | - | - | 1830 | 2312 | 2853 | 3442 | 4071 | 4728 | - | - | 936 | | 1025 | 1117 | 1215 | 1322 | 1443 | COP | 1,91 | 982 | 484 | 600 | 76 | 30 | 61 | 1 | 350 | 1523 | 67 | 230/1/50 | 0,45 | 2,3 | 16 | 8 | 5/8 | 3/8 |
| | | | | | | 32 | - | - | 1642 | 2082 | 2574 | 3109 | 3676 | 4265 | - | - | 961 | | 1063 | 1170 | 1285 | 1412 | 1554 | | | | | | | | | | | | | | | | | | | | |
| | | | | | | 38 | - | - | - | 1884 | 2330 | 2812 | 3321 | 3849 | - | - | - | | 1096 | 1218 | 1349 | 1493 | 1653 | | | | | | | | | | | | | | | | | | | | |
| | | | | | | 43 | - | - | - | - | 2110 | 2547 | 3007 | 3481 | - | - | - | | - | 1257 | 1402 | 1562 | 1738 | | | | | | | | | | | | | | | | | | | | |
| UP-NJ9232GS-EAE00 | 647NMS6C3FI | CP: 400V-3ph-50Hz Fan: 230V-1ph-50Hz | 2,1 | NJ9232GS-M | 947NM1101AA | 25 | - | - | 1830 | 2311 | 2851 | 3439 | 4066 | 4719 | - | - | 938 | | 1035 | 1133 | 1237 | 1353 | 1487 | COP | 1,89 | 982 | 484 | 600 | 76 | 30 | 61 | 1 | 350 | 1523 | 67 | 230/1/50 | 0,45 | 2,3 | 16 | 8 | 5/8 | 8 |
| | | | | | | 32 | - | - | 1642 | 2082 | 2573 | 3106 | 3670 | 4254 | - | - | 963 | | 1070 | 1183 | 1306 | 1445 | 1606 | | | | | | | | | | | | | | | | | | | | |
| | | | | | | 38 | - | - | - | 1884 | 2328 | 2809 | 3315 | 3836 | - | - | - | | 1100 | 1227 | 1367 | 1527 | 1712 | | | | | | | | | | | | | | | | | | | | |
| | | | | | | 43 | - | - | - | - | 2109 | 2544 | 3000 | 3466 | - | - | - | | - | 1264 | 1419 | 1596 | 1801 | | | | | | | | | | | | | | | | | | | | |
| UP-NTU6238GKV-EAE00 | 605EAS6C4FI | CP: 230V-1ph-50Hz Fan: 230V-1ph-50Hz | 5,6 | NTU6238GKV-A-CSR | 925EA6004AF | 25 | - | - | 2059 | 2541 | 3089 | 3676 | 4279 | 4874 | - | - | 965 | | 1039 | 1117 | 1201 | 1293 | 1394 | COP | 2,03 | 982 | 484 | 600 | 76 | 30 | 61 | 1 | 350 | 1523 | 67 | 230/1/50 | 0,45 | 2,3 | 16 | 8 | 5/8 | 3/8 |
| | | | | | | 32 | - | - | 1888 | 2322 | 2808 | 3323 | 3844 | 4352 | - | - | 1027 | | 1111 | 1201 | 1298 | 1404 | 1519 | | | | | | | | | | | | | | | | | | | | |
| | | | | | | 38 | - | - | - | 2113 | 2543 | 2992 | 3441 | 3871 | - | - | - | | 1168 | 1270 | 1380 | 1498 | 1627 | | | | | | | | | | | | | | | | | | | | |
| | | | | | | 43 | - | - | - | - | 2297 | 2689 | 3077 | 3444 | - | - | - | | - | 1326 | 1447 | 1577 | 1718 | | | | | | | | | | | | | | | | | | | | |
| UP-NJ9238GS-EAE00 | 647RMS6C3FI | CP: 400V-3ph-50Hz Fan: 230V-1ph-50Hz | 2,9 | NJ9238GS-M | 947RM1101AA | 25 | - | - | 2292 | 2832 | 3410 | 4020 | 4661 | 5327 | - | - | 1131 | | 1245 | 1363 | 1490 | 1634 | 1803 | COP | 1,92 | 982 | 484 | 600 | 76 | 30 | 61 | 1 | 350 | 1523 | 67 | 230/1/50 | 0,45 | 2,3 | 16 | 8 | 5/8 | 3/8 |
| | | | | | | 32 | - | - | 2044 | 2531 | 3055 | 3611 | 4195 | 4802 | - | - | 1158 | | 1284 | 1419 | 1567 | 1738 | 1937 | | | | | | | | | | | | | | | | | | | | |
| | | | | | | 38 | - | - | - | 2263 | 2736 | 3240 | 3771 | 4323 | - | - | - | | 1317 | 1467 | 1635 | 1828 | 2054 | | | | | | | | | | | | | | | | | | | | |
| | | | | | | 43 | - | - | - | - | - | 2908 | 3393 | - | - | - | - | | - | - | 1691 | 1903 | - | | | | | | | | | | | | | | | | | | | | |
| UP-NJX6250GS-EAE00 | 645BSS6C3FI | CP: 400V-3ph-50Hz Fan: 230V-1ph-50Hz | 3,4 | NJX6250GS-M | 945BS2101AA | 25 | - | - | 3002 | 3685 | 4453 | 5290 | 6180 | 7107 | - | - | 1447 | | 1599 | 1760 | 1932 | 2115 | 2312 | COP | 1,93 | 1082 | 490 | 708 | 88 | 34 | 65 | 1 | 400 | 2673 | 120 | 230/1/50 | 0,71 | 3,9 | 16 | 10 | 5/8 | 3/8 |
| | | | | | | 32 | - | - | 2715 | 3329 | 4018 | 4767 | 5562 | 6388 | - | - | 1530 | | 1696 | 1871 | 2059 | 2260 | 2475 | | | | | | | | | | | | | | | | | | | | |
| | | | | | | 38 | - | - | - | 3011 | 3635 | 4311 | 5026 | 5766 | - | - | - | | 1775 | 1968 | 2173 | 2392 | 2627 | | | | | | | | | | | | | | | | | | | | |
| | | | | | | 43 | - | - | - | - | 3313 | 3929 | 4578 | 5248 | - | - | - | | - | 2050 | 2273 | 2511 | 2763 | | | | | | | | | | | | | | | | | | | | |
| UP-SE6015GK-EAE00 | 6S1ACS6C4FI | CP: 230V-1ph-50Hz Fan: 230V-1ph-50Hz | 8,5 | SE6015GK-C | 301AC1104AA | 25 | 2365 | 2886 | 3475 | 4142 | 4894 | 5738 | 6676 | 7710 | 1386 | 1487 | 1599 | | 1720 | 1851 | 1992 | 2142 | 2301 | COP | 1,96 | 1082 | 490 | 708 | 92 | 33 | 64 | 1 | 400 | 2673 | 120 | 230/1/50 | 0,71 | 3,9 | 18 | 12 | 5/8 | 1/2 |
| | | | | | | 32 | - | 2656 | 3199 | 3810 | 4496 | 5264 | 6120 | 7065 | - | 1649 | 1774 | | 1909 | 2054 | 2210 | 2375 | 2552 | | | | | | | | | | | | | | | | | | | | |
| | | | | | | 38 | - | - | 2931 | 3497 | 4129 | 4836 | 5623 | 6493 | - | - | 1953 | | 2102 | 2262 | 2432 | 2613 | 2807 | | | | | | | | | | | | | | | | | | | | |
| | | | | | | 43 | - | - | - | 3211 | 3801 | 4459 | 5190 | 6000 | - | - | - | | 2293 | 2466 | 2650 | 2846 | 3055 | | | | | | | | | | | | | | | | | | | | |
| UP-SE6015GS-EAE00 | 6S1AOS6C3FI | CP: 400V-3ph-50Hz Fan: 230V-1ph-50Hz | 3,2 | SE6015GS-O | 301AO1101AA | 25 | 2366 | 2888 | 3477 | 4144 | 4897 | 5742 | 6681 | 7717 | 1364 | 1463 | 1572 | | 1691 | 1820 | 1958 | 2105 | 2261 | COP | 2 | 1082 | 490 | 708 | 92 | 33 | 64 | 1 | 400 | 2673 | 120 | 230/1/50 | 0,71 | 3,9 | 18 | 12 | 3/4 | 1/2 |
| | | | | | | 32 | - | 2658 | 3202 | 3813 | 4499 | 5269 | 6126 | 7072 | - | 1621 | 1744 | | 1877 | 2019 | 2171 | 2334 | 2507 | | | | | | | | | | | | | | | | | | | | |
| | | | | | | 38 | - | - | 2934 | 3500 | 4134 | 4842 | 5630 | 6502 | - | - | 1919 | | 2066 | 2222 | 2389 | 2567 | 2757 | | | | | | | | | | | | | | | | | | | | |
| | | | | | | 43 | - | - | - | 3215 | 3806 | 4465 | 5198 | 6009 | - | - | - | | 2252 | 2422 | 2603 | 2795 | 2999 | | | | | | | | | | | | | | | | | | | | |
| UP-SE6018GK-EAE00 | 6S1BCS6C4FI | CP: 230V-1ph-50Hz Fan: 230V-1ph-50Hz | 10,2 | SE6018GK-C | 301BC1104AA | 25 | 2822 | 3442 | 4144 | 4937 | 5832 | 6835 | 7950 | 9177 | 1599 | 1718 | 1848 | | 1991 | 2145 | 2310 | 2486 | 2674 | COP | 2,02 | 1082 | 490 | 708 | 92 | 33 | 64 | 1 | 400 | 2545 | 120 | 230/1/50 | 0,91 | 3,9 | 18 | 12 | 3/4 | 1/2 |
| | | | | | | 32 | - | 3167 | 3814 | 4541 | 5357 | 6271 | 7287 | 8409 | - | 1906 | 2053 | | 2211 | 2382 | 2565 | 2760 | 2968 | | | | | | | | | | | | | | | | | | | | |
| | | | | | | 38 | - | - | 3494 | 4168 | 4920 | 5760 | 6695 | 7728 | - | - | 2262 | | 2437 | 2624 | 2824 | 3038 | 3266 | | | | | | | | | | | | | | | | | | | | |
| | | | | | | 43 | - | - | - | 3826 | 4528 | 5310 | 6179 | 7140 | - | - | - | | 2660 | 2863 | 3079 | 3310 | 3556 | | | | | | | | | | | | | | | | | | | | |
| UP-SE6018GS-EAE00 | 6S1BOS6C3FI | CP: 400V-3ph-50Hz Fan: 230V-1ph-50Hz | 4,7 | SE6018GS-O | 301BO1101AA | 25 | 2825 | 3447 | 4150 | 4945 | 5843 | 6849 | 7967 | 9199 | 1524 | 1637 | 1761 | | 1896 | 2041 | 2198 | 2365 | 2543 | COP | 2,13 | 1082 | 490 | 708 | 92 | 33 | 64 | 1 | 400 | 2545 | 120 | 230/1/50 | 0,91 | 3,9 | 18 | 12 | 3/4 | 1/2 |
| | | | | | | 32 | - | 3173 | 3822 | 4551 | 5369 | 6286 | 7307 | 8434 | - | 1815 | 1954 | | 2104 | 2266 | 2438 | 2623 | 2819 | | | | | | | | | | | | | | | | | | | | |
| | | | | | | 38 | - | - | 3504 | 4179 | 4935 | 5779 | 6718 | 7757 | - | - | 2151 | | 2317 | 2494 | 2683 | 2885 | 3100 | | | | | | | | | | | | | | | | | | | | |
| | | | | | | 43 | - | - | - | 3840 | 4546 | 5332 | 6205 | 7172 | - | - | - | | 2527 | 2718 | 2923 | 3141 | 3372 | | | | | | | | | | | | | | | | | | | | |
| UP-SE6021GS-EAE00 | 6S1COS6C3FI | CP: 400V-3ph-50Hz Fan: 230V-1ph-50Hz | 4,9 | SE6021GS-O | 301CO1101AA | 25 | 3187 | 3883 | 4664 | 5544 | 6531 | 7630 | 8845 | 10174 | 1699 | 1829 | 1974 | | 2133 | 2305 | 2491 | 2692 | 2908 | COP | 2,1 | 1082 | 490 | 708 | 92 | 33 | 64 | 1 | 400 | 2545 | 120 | 230/1/50 | 0,91 | 3,9 | 18 | 12 | 3/4 | 1/2 |
| | | | | | | 32 | - | 3564 | 4285 | 5090 | 5989 | 6989 | 8095 | 9309 | - | 2031 | 2193 | | 2370 | 2561 | 2767 | 2989 | 3228 | | | | | | | | | | | | | | | | | | | | |
| | | | | | | 38 | - | - | 3916 | 4662 | 5489 | 6408 | 7424 | 8540 | - | - | 2419 | | 2613 | 2823 | 3049 | 3292 | 3553 | | | | | | | | | | | | | | | | | | | | |
| | | | | | | 43 | - | - | - | 4270 | 5041 | 5895 | 6838 | 7875 | - | - | - | | 2854 | 3082 | 3326 | 3588 | 3870 | | | | | | | | | | | | | | | | | | | | |
| UP-SE6026GS-EAE00 | 6S1GOS6C3FI | CP: 400V-3ph-50Hz Fan: 230V-1ph-50Hz | 6,2 | SE6026GS-O | 301GO1101AA | 25 | 4097 | 5006 | 6040 | 7218 | 8555 | 10063 | 11751 | 13623 | 2158 | 2308 | 2471 | | 2649 | 2839 | 3042 | 3256 | 3481 | SEPR | 3,26 | 1277 | 538 | 1005 | 107 | 36 | 67 | 1 | 500 | 5195 | 220 | 230/1/50 | 1,34 | 6 | 22 | 16 | 7/8 | 5/8 |
| | | | | | | 32 | - | 4623 | 5580 | 6660 | 7882 | 9259 | 10803 | 12518 | - | 2552 | 2736 | | 2933 | 3143 | 3366 | 3602 | 3851 | | | | | | | | | | | | | | | | | | | | |
| | | | | | | 38 | - | - | 5133 | 6137 | 7267 | 8537 | 9961 | 11547 | - | - | 3002 | | 3219 | 3450 | 3694 | 3951 | 4223 | | | | | | | | | | | | | | | | | | | | |
| | | | | | | 43 | - | - | 4716 | 5661 | 6718 | 7904 | 9232 | 10712 | - | - | 3266 | | 3501 | 3750 | 4013 | 4291 | 4584 | | | | | | | | | | | | | | | | | | | | |
| UP-SE6030GS-EAE00 | 6S1DOS6C3FI | CP: 400V-3ph-50Hz Fan: 230V-1ph-50Hz | 6,6 | SE6030GS-O | 301DO1101AA | 25 | 4613 | 5631 | 6782 | 8087 | 9562 | 11216 | 13058 | 15090 | 2369 | 2539 | 2727 | | 2931 | 3152 | 3388 | 3640 | 3907 | SEPR | 3,28 | 1277 | 538 | 1005 | 107 | 36 | 67 | 1 | 500 | 5195 | 220 | 230/1/50 | 1,34 | 6 | 22 | 16 | 7/8 | 5/8 |
| | | | | | | 32 | - | 5189 | 6253 | 7449 | 8796 | 10305 | 11988 | 13848 | - | 2811 | 3021 | | 3248 | 3492 | 3753 | 4030 | 4325 | | | | | | | | | | | | | | | | | | | | |
| | | | | | | 38 | - | - | 5740 | 6850 | 8093 | 9484 | 11035 | 12752 | - | - | 3320 | | 3570 | 3837 | 4122 | 4426 | 4748 | | | | | | | | | | | | | | | | | | | | |
| | | | | | | 43 | - | - | - | 6304 | 7466 | 8762 | 10207 | 11807 | - | - | - | | 3887 | 4176 | 4484 | 4811 | 5158 | | | | | | | | | | | | | | | | | | | | |
| UP-SE6036GS-EAE00 | 6S1EOS6C3FI | CP: 400V-3ph-50Hz Fan: 230V-1ph-50Hz | 7,6 | SE6036GS-O | 301EO1101AA | 25 | 5702 | 6967 | 8403 | 10037 | 11889 | 13977 | 16310 | 18895 | 2782 | 2981 | 3199 | | 3436 | 3690 | 3961 | 4248 | 4551 | SEPR | 3,51 | 1277 | 538 | 1005 | 107 | 36 | 67 | 1 | 500 | 4739 | 220 | 230/1/50 | 2,23 | 6 | 22 | 16 | 7/8 | 5/8 |
| | | | | | | 32 | - | 6433 | 7761 | 9260 | 10954 | 12860 | 14994 | 17364 | - | 3304 | 3548 | | 3811 | 4091 | 4390 | 4706 | 5039 | | | | | | | | | | | | | | | | | | | | |
| | | | | | | 38 | - | - | 7140 | 8532 | 10098 | 11857 | 13827 | 16017 | - | - | 3900 | | 4189 | 4496 | 4822 | 5167 | 5532 | | | | | | | | | | | | | | | | | | | | |
| | | | | | | 43 | - | - | 6559 | 7870 | 9335 | 10977 | 12814 | 14859 | - | - | 4249 | | 4561 | 4893 | 5245 | 5616 | 6008 | | | | | | | | | | | | | | | | | | | | |
| UP-SE6043GS-EAE00 | 6S1FOS6C3FI | CP: 400V-3ph-50Hz Fan: 230V-1ph-50Hz | 8,6 | SE6043GS-O | 301FO1101AA | 25 | 6698 | 8167 | 9825 | 11698 | 13807 | 16165 | 18780 | 21654 | 3318 | 3569 | 3846 | | 4149 | 4476 | 4829 | 5207 | 5610 | SEPR | 3,35 | 1277 | 538 | 1005 | 107 | 36 | 67 | 1 | 500 | 4739 | 220 | 230/1/50 | 2,23 | 6 | 22 | 16 | 7/8 | 5/8 |
| | | | | | | 32 | - | 7515 | 9046 | 10762 | 12686 | 14835 | 17222 | 19851 | - | 3962 | 4272 | | 4608 | 4971 | 5360 | 5777 | 6222 | | | | | | | | | | | | | | | | | | | | |
| | | | | | | 38 | - | - | 8290 | 9881 | 11656 | 13635 | 15832 | 18256 | - | - | 4707 | | 5077 | 5475 | 5901 | 6356 | 6843 | | | | | | | | | | | | | | | | | | | | |
| | | | | | | 43 | - | - | - | 9077 | 10735 | 12578 | 14622 | 16879 | - | - | - | | 5540 | 5970 | 6430 | 6921 | 7445 | | | | | | | | | | | | | | | | | | | | |

embraco

**Note:** *Subject to modification without prior notification.*

GENERAL DATA & PERFORMANCE

# R449A - MBP - SH10K

| CONDENSING UNITS | | | | COMPRESSORS | | AMBIENT TEMP. | EN13125 - SUBCOOLING OK - MIDPOINT COOLING CAPACITY (W) | | | | | | | | POWER INPUT (W) | | | | | | | | | ECO DESIGN | | DIMENSIONS (mm) | | | WEIGHT | ACOUSTICS dB (A) | | CONDENSER/FAN | | | | | | LIQUID RECEIVER | CONNECTION DIAMETERS | | | |
|---|---|---|---|---|---|---|---|---|---|---|---|---|---|---|---|---|---|---|---|---|---|---|---|---|---|---|---|---|---|---|---|---|---|---|---|---|---|---|---|---|---|---|
| CONDENSING UNITS MODELS | CONDENSING UNIT BOM | VOLTAGE SUPPLY (V) | I NOM (A) | COMPRESSOR MODELS | COMPRESSOR BOM | (°C) | -25°C | -20°C | -15°C | -10°C | -5°C | 0°C | +5°C | +10°C | -25°C | -20°C | -15°C | | -10°C | -5°C | 0°C | +5°C | +10°C | Type | Cop/ Seer | W (width) | D (depth) | H (height) | Net (kg) | Sound Press. @10m | Sound power level | Number of fan | Fan diameter (mm) | Airflow ($m^3/h$) | Fan power (W) | Voltage supply (V) | Internal volume ($dm^3$) | $dm^3$ | Suction (mm) | Liquid (mm) | Suction (ª) | Liquid (ª) |
| UP-NEU6212GK-EAE00 | 667HAS6C2FI | CP: 230V-1ph-50Hz Fan: 230V-1ph-50Hz | 3,1 | NEU6212GK-A-CSIR | 958HA51M1AJ | 25 | - | - | 717 | 887 | 1085 | 1313 | 1569 | 1850 | - | - | 428 | | 450 | 471 | 495 | 524 | 559 | - | - | 982 | 484 | 600 | 67 | 28 | 59 | 1 | 350 | 1695 | 67 | 230/1/50 | 0,23 | 1,6 | 10 | 6 | 3/8 | 1/4 |
| | | | | | | 32 | - | - | 645 | 808 | 996 | 1209 | 1445 | 1703 | - | - | 422 | | 457 | 492 | 527 | 566 | 610 | | | | | | | | | | | | | | | | | | | | |
| | | | | | | 38 | - | - | 583 | 735 | 910 | 1105 | 1320 | 1554 | - | - | 429 | | 473 | 515 | 557 | 601 | 649 | | | | | | | | | | | | | | | | | | | | |
| | | | | | | 43 | - | - | - | 671 | 830 | 1008 | 1204 | 1415 | - | - | - | | 494 | 539 | 585 | 631 | 679 | | | | | | | | | | | | | | | | | | | | |
| UP-NEU6215GK-EAE00 | 669NAS6C4FI | CP: 230V-1ph-50Hz Fan: 230V-1ph-50Hz | 2,8 | NEU6215GK-A-CSR | 959NA5190AF | 25 | - | - | 974 | 1197 | 1452 | 1739 | 2056 | 2399 | - | - | 512 | | 560 | 610 | 663 | 721 | 786 | - | - | 982 | 484 | 600 | 67 | 28 | 59 | 1 | 350 | 1695 | 67 | 230/1/50 | 0,23 | 1,6 | 10 | 6 | 3/8 | 1/4 |
| | | | | | | 32 | - | - | 878 | 1087 | 1324 | 1588 | 1877 | 2188 | - | - | 533 | | 585 | 640 | 700 | 768 | 844 | | | | | | | | | | | | | | | | | | | | |
| | | | | | | 38 | - | - | 795 | 987 | 1204 | 1445 | 1706 | 1987 | - | - | 551 | | 608 | 669 | 738 | 815 | 903 | | | | | | | | | | | | | | | | | | | | |
| | | | | | | 43 | - | - | - | - | 1098 | 1316 | 1553 | 1805 | - | - | - | | - | 697 | 773 | 859 | 957 | | | | | | | | | | | | | | | | | | | | |
| UP-NT6222GK-EAE00 | 602CAS6C4FI | CP: 230V-1ph-50Hz Fan: 230V-1ph-50Hz | 4,3 | NT6222GK-A-CSR | 922CA0404AF | 25 | - | - | 1184 | 1465 | 1779 | 2123 | 2494 | 2886 | - | - | 730 | | 783 | 847 | 919 | 998 | 1080 | - | - | 982 | 484 | 600 | 69 | 29 | 60 | 1 | 350 | 1695 | 67 | 230/1/50 | 0,23 | 1,6 | 12 | 8 | 1/2 | 3/8 |
| | | | | | | 32 | - | - | 1062 | 1314 | 1594 | 1899 | 2227 | 2573 | - | - | 757 | | 818 | 887 | 963 | 1043 | 1123 | | | | | | | | | | | | | | | | | | | | |
| | | | | | | 38 | - | - | - | 1176 | 1423 | 1693 | 1982 | 2289 | - | - | - | | 848 | 920 | 998 | 1077 | 1156 | | | | | | | | | | | | | | | | | | | | |
| | | | | | | 43 | - | - | - | - | 1269 | 1508 | 1765 | 2039 | - | - | - | | - | 947 | 1025 | 1103 | 1180 | | | | | | | | | | | | | | | | | | | | |
| UP-NT6224GK-EAE00 | 622RAS6C4FI | CP: 230V-1ph-50Hz Fan: 230V-1ph-50Hz | 4,5 | NT6224GK-A-CSR | 922RA0404AF | 25 | - | - | 1444 | 1814 | 2223 | 2669 | 3148 | 3657 | - | - | 799 | | 861 | 926 | 995 | 1069 | 1148 | - | - | 982 | 484 | 600 | 69 | 29 | 60 | 1 | 350 | 1523 | 67 | 230/1/50 | 0,45 | 2,3 | 12 | 8 | 1/2 | 3/8 |
| | | | | | | 32 | - | - | 1308 | 1634 | 1999 | 2400 | 2836 | 3303 | - | - | 831 | | 902 | 976 | 1054 | 1137 | 1226 | | | | | | | | | | | | | | | | | | | | |
| | | | | | | 38 | - | - | 1176 | 1470 | 1802 | 2171 | 2574 | 3009 | - | - | 860 | | 938 | 1019 | 1105 | 1196 | 1292 | | | | | | | | | | | | | | | | | | | | |
| | | | | | | 43 | - | - | - | - | 1639 | 1984 | 2363 | 2774 | - | - | - | | - | 1055 | 1147 | 1244 | 1347 | | | | | | | | | | | | | | | | | | | | |
| UP-NT6226GK-EAE00 | 603BAS6C4FI | CP: 230V-1ph-50Hz Fan: 230V-1ph-50Hz | 4,8 | NT6226GK-A-CSR | 923BA0204AF | 25 | - | - | 1590 | 1990 | 2444 | 2945 | 3486 | 4058 | - | - | 825 | | 896 | 973 | 1057 | 1150 | 1253 | - | - | 982 | 484 | 600 | 69 | 29 | 60 | 1 | 350 | 1523 | 67 | 230/1/50 | 0,45 | 2,3 | 12 | 8 | 1/2 | 3/8 |
| | | | | | | 32 | - | - | 1442 | 1801 | 2207 | 2656 | 3139 | 3652 | - | - | 865 | | 945 | 1031 | 1123 | 1224 | 1335 | | | | | | | | | | | | | | | | | | | | |
| | | | | | | 38 | - | - | 1303 | 1628 | 1995 | 2399 | 2835 | 3297 | - | - | 900 | | 987 | 1080 | 1180 | 1288 | 1405 | | | | | | | | | | | | | | | | | | | | |
| | | | | | | 43 | - | - | - | - | 1814 | 2182 | 2579 | 2998 | - | - | - | | - | 1119 | 1225 | 1339 | 1462 | | | | | | | | | | | | | | | | | | | | |
| UP-NJ9232GK-EAE00 | 643NAS6C4FI | CP: 230V-1ph-50Hz Fan: 230V-1ph-50Hz | 5,7 | NJ9232GK-A-CSR | 943NA1104AF | 25 | - | - | 1802 | 2288 | 2833 | 3428 | 4064 | 4734 | - | - | 931 | | 1020 | 1112 | 1211 | 1321 | 1445 | - | - | 982 | 484 | 600 | 76 | 30 | 61 | 1 | 350 | 1523 | 67 | 230/1/50 | 0,45 | 2,3 | 16 | 8 | 5/8 | 3/8 |
| | | | | | | 32 | - | - | 1608 | 2044 | 2535 | 3074 | 3654 | 4265 | - | - | 956 | | 1057 | 1164 | 1279 | 1408 | 1555 | | | | | | | | | | | | | | | | | | | | |
| | | | | | | 38 | - | - | - | 1827 | 2276 | 2771 | 3303 | 3867 | - | - | - | | 1088 | 1209 | 1342 | 1489 | 1655 | | | | | | | | | | | | | | | | | | | | |
| | | | | | | 43 | - | - | - | - | 2062 | 2521 | 3016 | 3541 | - | - | - | | - | 1248 | 1395 | 1559 | 1744 | | | | | | | | | | | | | | | | | | | | |
| UP-NJ9232GS-EAE00 | 647NMS6C3FI | CP: 400V-3ph-50Hz Fan: 230V-1ph-50Hz | 2,1 | NJ9232GS-M | 947NM1101AA | 25 | - | - | 1802 | 2287 | 2831 | 3424 | 4059 | 4725 | - | - | 933 | | 1030 | 1128 | 1233 | 1351 | 1489 | - | - | 982 | 484 | 600 | 76 | 30 | 61 | 1 | 350 | 1523 | 67 | 230/1/50 | 0,45 | 2,3 | 16 | 8 | 5/8 | 8 |
| | | | | | | 32 | - | - | 1608 | 2043 | 2534 | 3071 | 3648 | 4254 | - | - | 957 | | 1064 | 1176 | 1300 | 1441 | 1607 | | | | | | | | | | | | | | | | | | | | |
| | | | | | | 38 | - | - | - | 1827 | 2275 | 2768 | 3297 | 3855 | - | - | - | | 1092 | 1219 | 1360 | 1523 | 1714 | | | | | | | | | | | | | | | | | | | | |
| | | | | | | 43 | - | - | - | - | 2061 | 2518 | 3010 | 3529 | - | - | - | | - | 1255 | 1412 | 1594 | 1808 | | | | | | | | | | | | | | | | | | | | |
| UP-NTU6238GKV-EAE00 | 605EAS6C4FI | CP: 230V-1ph-50Hz Fan: 230V-1ph-50Hz | 5,6 | NTU6238GKV-A-CSR | 925EA6004AF | 25 | - | - | 2025 | 2510 | 3061 | 3655 | 4269 | 4882 | - | - | 959 | | 1032 | 1110 | 1195 | 1290 | 1397 | - | - | 982 | 484 | 600 | 76 | 30 | 61 | 1 | 350 | 1523 | 67 | 230/1/50 | 0,45 | 2,3 | 16 | 8 | 5/8 | 3/8 |
| | | | | | | 32 | - | - | 1841 | 2274 | 2764 | 3287 | 3825 | 4356 | - | - | 1019 | | 1103 | 1194 | 1293 | 1402 | 1522 | | | | | | | | | | | | | | | | | | | | |
| | | | | | | 38 | - | - | - | 2051 | 2488 | 2952 | 3424 | 3886 | - | - | - | | 1160 | 1262 | 1373 | 1494 | 1627 | | | | | | | | | | | | | | | | | | | | |
| | | | | | | 43 | - | - | - | - | 2245 | 2659 | 3077 | 3482 | - | - | - | | - | 1314 | 1435 | 1567 | 1711 | | | | | | | | | | | | | | | | | | | | |
| UP-NJ9238GS-EAE00 | 647RMS6C3FI | CP: 400V-3ph-50Hz Fan: 230V-1ph-50Hz | 2,9 | NJ9238GS-M | 947RM1101AA | 25 | - | - | 2258 | 2799 | 3378 | 3993 | 4644 | 5328 | - | - | 1125 | | 1239 | 1356 | 1484 | 1630 | 1804 | - | - | 982 | 484 | 600 | 76 | 30 | 61 | 1 | 350 | 1523 | 67 | 230/1/50 | 0,45 | 2,3 | 16 | 8 | 5/8 | 3/8 |
| | | | | | | 32 | - | - | 1993 | 2476 | 3001 | 3565 | 4169 | 4809 | - | - | 1151 | | 1276 | 1410 | 1559 | 1732 | 1939 | | | | | | | | | | | | | | | | | | | | |
| | | | | | | 38 | - | - | - | 2192 | 2674 | 3198 | 3764 | 4368 | - | - | - | | 1307 | 1456 | 1626 | 1824 | 2061 | | | | | | | | | | | | | | | | | | | | |
| | | | | | | 43 | - | - | - | - | - | 2896 | 3431 | - | - | - | - | | - | - | 1684 | 1904 | - | | | | | | | | | | | | | | | | | | | | |
| UP-NJX6250GS-EAE00 | 645BSS6C3FI | CP: 400V-3ph-50Hz Fan: 230V-1ph-50Hz | 3,4 | NJX6250GS-M | 945BS2101AA | 25 | - | - | 2952 | 3637 | 4410 | 5257 | 6162 | 7112 | - | - | 1442 | | 1591 | 1751 | 1923 | 2109 | 2312 | - | - | 1082 | 490 | 708 | 88 | 34 | 65 | 1 | 400 | 2673 | 120 | 230/1/50 | 0,71 | 3,9 | 16 | 10 | 5/8 | 3/8 |
| | | | | | | 32 | - | - | 2651 | 3266 | 3961 | 4721 | 5535 | 6388 | - | - | 1519 | | 1684 | 1860 | 2049 | 2254 | 2476 | | | | | | | | | | | | | | | | | | | | |
| | | | | | | 38 | - | - | - | 2933 | 3564 | 4254 | 4991 | 5764 | - | - | - | | 1763 | 1956 | 2163 | 2386 | 2627 | | | | | | | | | | | | | | | | | | | | |
| | | | | | | 43 | - | - | - | - | 3233 | 3865 | 4541 | 5248 | - | - | - | | - | 2036 | 2260 | 2500 | 2759 | | | | | | | | | | | | | | | | | | | | |
| UP-SE6015GK-EAE00 | 6S1ACS6C4FI | CP: 230V-1ph-50Hz Fan: 230V-1ph-50Hz | 8,5 | SE6015GK-C | 301AC1104AA | 25 | 2298 | 2822 | 3414 | 4086 | 4847 | 5704 | 6662 | 7724 | 1380 | 1478 | 1586 | | 1706 | 1838 | 1981 | 2137 | 2306 | - | - | 1082 | 490 | 708 | 92 | 33 | 64 | 1 | 400 | 2673 | 120 | 230/1/50 | 0,71 | 3,9 | 18 | 12 | 5/8 | 1/2 |
| | | | | | | 32 | 2091 | 2574 | 3116 | 3730 | 4425 | 5210 | 6091 | 7073 | 1520 | 1633 | 1757 | | 1893 | 2041 | 2200 | 2373 | 2559 | | | | | | | | | | | | | | | | | | | | |
| | | | | | | 38 | 1864 | 2319 | 2825 | 3395 | 4041 | 4771 | 5592 | 6510 | 1673 | 1798 | 1935 | | 2084 | 2245 | 2418 | 2605 | 2805 | | | | | | | | | | | | | | | | | | | | |
| | | | | | | 43 | 1646 | 2082 | 2563 | 3101 | 3709 | 4397 | 5172 | 6041 | 1823 | 1959 | 2106 | | 2266 | 2438 | 2622 | 2820 | 3032 | | | | | | | | | | | | | | | | | | | | |
| UP-SE6015GS-EAE00 | 6S1AOS6C3FI | CP: 400V-3ph-50Hz Fan: 230V-1ph-50Hz | 3,2 | SE6015GS-O | 301AO1101AA | 25 | 2300 | 2823 | 3416 | 4089 | 4851 | 5709 | 6668 | 7731 | 1358 | 1453 | 1560 | | 1678 | 1807 | 1947 | 2100 | 2266 | - | - | 1082 | 490 | 708 | 92 | 33 | 64 | 1 | 400 | 2673 | 120 | 230/1/50 | 0,71 | 3,9 | 18 | 12 | 3/4 | 1/2 |
| | | | | | | 32 | 2092 | 2576 | 3119 | 3733 | 4429 | 5215 | 6098 | 7081 | 1495 | 1606 | 1727 | | 1861 | 2005 | 2162 | 2331 | 2514 | | | | | | | | | | | | | | | | | | | | |
| | | | | | | 38 | 1866 | 2321 | 2828 | 3399 | 4045 | 4776 | 5599 | 6518 | 1644 | 1767 | 1902 | | 2048 | 2206 | 2376 | 2558 | 2755 | | | | | | | | | | | | | | | | | | | | |
| | | | | | | 43 | 1648 | 2085 | 2566 | 3105 | 3714 | 4403 | 5179 | 6050 | 1792 | 1925 | 2070 | | 2226 | 2395 | 2575 | 2769 | 2977 | | | | | | | | | | | | | | | | | | | | |
| UP-SE6018GK-EAE00 | 6S1BCS6C4FI | CP: 230V-1ph-50Hz Fan: 230V-1ph-50Hz | 10,2 | SE6018GK-C | 301BC1104AA | 25 | 2742 | 3365 | 4071 | 4871 | 5776 | 6795 | 7933 | 9193 | 1592 | 1706 | 1833 | | 1974 | 2129 | 2298 | 2481 | 2680 | - | - | 1082 | 490 | 708 | 92 | 33 | 64 | 1 | 400 | 2545 | 120 | 230/1/50 | 0,91 | 3,9 | 18 | 12 | 3/4 | 1/2 |
| | | | | | | 32 | 2493 | 3069 | 3715 | 4445 | 5272 | 6206 | 7253 | 8419 | 1755 | 1887 | 2033 | | 2192 | 2366 | 2554 | 2757 | 2975 | | | | | | | | | | | | | | | | | | | | |
| | | | | | | 38 | 2223 | 2765 | 3368 | 4047 | 4814 | 5682 | 6658 | 7749 | 1933 | 2080 | 2240 | | 2415 | 2604 | 2808 | 3027 | 3263 | | | | | | | | | | | | | | | | | | | | |
| | | | | | | 43 | 1962 | 2482 | 3054 | 3696 | 4419 | 5237 | 6158 | 7191 | 2108 | 2267 | 2440 | | 2627 | 2829 | 3046 | 3278 | 3527 | | | | | | | | | | | | | | | | | | | | |
| UP-SE6018GS-EAE00 | 6S1BOS6C3FI | CP: 400V-3ph-50Hz Fan: 230V-1ph-50Hz | 4,7 | SE6018GS-O | 301BO1101AA | 25 | 2745 | 3370 | 4077 | 4879 | 5787 | 6809 | 7951 | 9215 | 1518 | 1626 | 1747 | | 1880 | 2026 | 2186 | 2359 | 2548 | - | - | 1082 | 490 | 708 | 92 | 33 | 64 | 1 | 400 | 2545 | 120 | 230/1/50 | 0,91 | 3,9 | 18 | 12 | 3/4 | 1/2 |
| | | | | | | 32 | 2499 | 3075 | 3723 | 4456 | 5286 | 6222 | 7273 | 8444 | 1672 | 1797 | 1935 | | 2086 | 2250 | 2428 | 2620 | 2827 | | | | | | | | | | | | | | | | | | | | |
| | | | | | | 38 | 2230 | 2773 | 3378 | 4059 | 4830 | 5701 | 6681 | 7776 | 1840 | 1979 | 2131 | | 2296 | 2475 | 2668 | 2875 | 3098 | | | | | | | | | | | | | | | | | | | | |
| | | | | | | 43 | 1971 | 2492 | 3066 | 3710 | 4436 | 5257 | 6183 | 7220 | 2006 | 2156 | 2320 | | 2497 | 2687 | 2892 | 3112 | 3347 | | | | | | | | | | | | | | | | | | | | |
| UP-SE6021GS-EAE00 | 6S1COS6C3FI | CP: 400V-3ph-50Hz Fan: 230V-1ph-50Hz | 4,9 | SE6021GS-O | 301CO1101AA | 25 | 3097 | 3794 | 4579 | 5465 | 6463 | 7579 | 8820 | 10189 | 1688 | 1814 | 1956 | | 2113 | 2287 | 2478 | 2687 | 2915 | - | - | 1082 | 490 | 708 | 92 | 33 | 64 | 1 | 400 | 2545 | 120 | 230/1/50 | 0,91 | 3,9 | 18 | 12 | 3/4 | 1/2 |
| | | | | | | 32 | 2807 | 3449 | 4168 | 4977 | 5888 | 6912 | 8055 | 9321 | 1865 | 2010 | 2172 | | 2349 | 2543 | 2754 | 2984 | 3234 | | | | | | | | | | | | | | | | | | | | |
| | | | | | | 38 | 2494 | 3100 | 3770 | 4522 | 5368 | 6321 | 7387 | 8573 | 2055 | 2217 | 2394 | | 2588 | 2799 | 3027 | 3275 | 3542 | | | | | | | | | | | | | | | | | | | | |
| | | | | | | 43 | 2197 | 2777 | 3413 | 4124 | 4922 | 5819 | 6827 | 7951 | 2242 | 2416 | 2607 | | 2815 | 3039 | 3282 | 3543 | 3825 | | | | | | | | | | | | | | | | | | | | |
| UP-SE6026GS-EAE00 | 6S1GOS6C3FI | CP: 400V-3ph-50Hz Fan: 230V-1ph-50Hz | 6,2 | SE6026GS-O | 301GO1101AA | 25 | 3980 | 4896 | 5939 | 7128 | 8482 | 10014 | 11735 | 13653 | 2154 | 2297 | 2456 | | 2631 | 2821 | 3026 | 3247 | 3485 | - | - | 1277 | 538 | 1005 | 107 | 36 | 67 | 1 | 500 | 5195 | 220 | 230/1/50 | 1,34 | 6 | 22 | 16 | 7/8 | 5/8 |
| | | | | | | 32 | 3641 | 4488 | 5444 | 6532 | 7770 | 9176 | 10761 | 12535 | 2363 | 2528 | 2711 | | 2909 | 3122 | 3352 | 3598 | 3861 | | | | | | | | | | | | | | | | | | | | |
| | | | | | | 38 | 3265 | 4064 | 4957 | 5969 | 7120 | 8427 | 9905 | 11566 | 2591 | 2776 | 2977 | | 3194 | 3427 | 3677 | 3944 | 4228 | | | | | | | | | | | | | | | | | | | | |
| | | | | | | 43 | 2901 | 3667 | 4516 | 5471 | 6556 | 7789 | 9185 | 10757 | 2818 | 3018 | 3234 | | 3467 | 3716 | 3982 | 4266 | 4567 | | | | | | | | | | | | | | | | | | | | |
| UP-SE6030GS-EAE00 | 6S1DOS6C3FI | CP: 400V-3ph-50Hz Fan: 230V-1ph-50Hz | 6,6 | SE6030GS-O | 301DO1101AA | 25 | 4483 | 5506 | 6665 | 7981 | 9473 | 11154 | 13034 | 15119 | 2360 | 2524 | 2707 | | 2908 | 3129 | 3370 | 3631 | 3914 | - | - | 1277 | 538 | 1005 | 107 | 36 | 67 | 1 | 500 | 5195 | 220 | 230/1/50 | 1,34 | 6 | 22 | 16 | 7/8 | 5/8 |
| | | | | | | 32 | 4087 | 5032 | 6094 | 7297 | 8662 | 10203 | 11935 | 13865 | 2594 | 2784 | 2993 | | 3221 | 3469 | 3737 | 4026 | 4337 | | | | | | | | | | | | | | | | | | | | |
| | | | | | | 38 | 3654 | 4544 | 5536 | 6655 | 7923 | 9357 | 10973 | 12781 | 2850 | 3060 | 3290 | | 3540 | 3810 | 4101 | 4413 | 4747 | | | | | | | | | | | | | | | | | | | | |
| | | | | | | 43 | 3236 | 4090 | 5033 | 6090 | 7285 | 8638 | 10164 | 11877 | 3101 | 3329 | 3577 | | 3844 | 4132 | 4441 | 4772 | 5126 | | | | | | | | | | | | | | | | | | | | |
| UP-SE6036GS-EAE00 | 6S1EOS6C3FI | CP: 400V-3ph-50Hz Fan: 230V-1ph-50Hz | 7,6 | SE6036GS-O | 301EO1101AA | 25 | 5541 | 6814 | 8261 | 9910 | 11786 | 13907 | 16287 | 18935 | 2776 | 2966 | 3179 | | 3411 | 3665 | 3940 | 4236 | 4556 | - | - | 1277 | 538 | 1005 | 107 | 36 | 67 | 1 | 500 | 4739 | 220 | 230/1/50 | 2,23 | 6 | 22 | 16 | 7/8 | 5/8 |
| | | | | | | 32 | 5068 | 6244 | 7571 | 9080 | 10796 | 12742 | 14935 | 17387 | 3052 | 3272 | 3515 | | 3779 | 4064 | 4371 | 4700 | 5053 | | | | | | | | | | | | | | | | | | | | |
| | | | | | | 38 | 4544 | 5653 | 6894 | 8298 | 9893 | 11703 | 13749 | 16045 | 3354 | 3599 | 3866 | | 4155 | 4467 | 4800 | 5157 | 5537 | | | | | | | | | | | | | | | | | | | | |
| | | | | | | 43 | 4037 | 5101 | 6280 | 7606 | 9110 | 10818 | 12751 | 14926 | 3652 | 3917 | 4205 | | 4515 | 4847 | 5202 | 5581 | 5984 | | | | | | | | | | | | | | | | | | | | |
| UP-SE6043GS-EAE00 | 6S1FOS6C3FI | CP: 400V-3ph-50Hz Fan: 230V-1ph-50Hz | 8,6 | SE6043GS-O | 301FO1101AA | 25 | 6509 | 7984 | 9651 | 11539 | 13671 | 16067 | 18737 | 21691 | 3302 | 3543 | 3814 | | 4113 | 4443 | 4803 | 5195 | 5623 | - | - | 1277 | 538 | 1005 | 107 | 36 | 67 | 1 | 500 | 4739 | 220 | 230/1/50 | 2,23 | 6 | 22 | 16 | 7/8 | 5/8 |
| | | | | | | 32 | 5920 | 7281 | 8808 | 10533 | 12483 | 14680 | 17141 | 19875 | 3643 | 3922 | 4230 | | 4568 | 4936 | 5336 | 5770 | 6238 | | | | | | | | | | | | | | | | | | | | |
| | | | | | | 38 | 5280 | 6563 | 7990 | 9594 | 11405 | 13450 | 15746 | 18308 | 4013 | 4322 | 4661 | | 5031 | 5432 | 5865 | 6331 | 6834 | | | | | | | | | | | | | | | | | | | | |
| | | | | | | 43 | 4667 | 5897 | 7252 | 8768 | 10477 | 12405 | 14575 | 17004 | 4376 | 4711 | 5076 | | 5471 | 5898 | 6358 | 6851 | 7382 | | | | | | | | | | | | | | | | | | | | |

embraco

**Note:** *Subject to modification without prior notification.*

# EXTERNAL VIEWS

## MODEL HOUSING 1

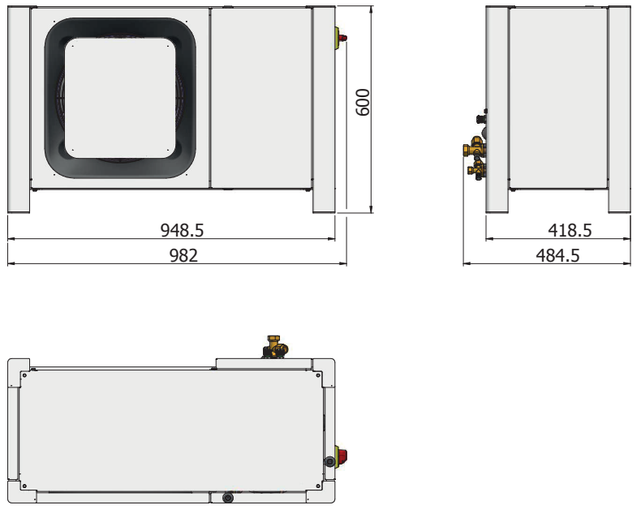


## MODEL HOUSING 3

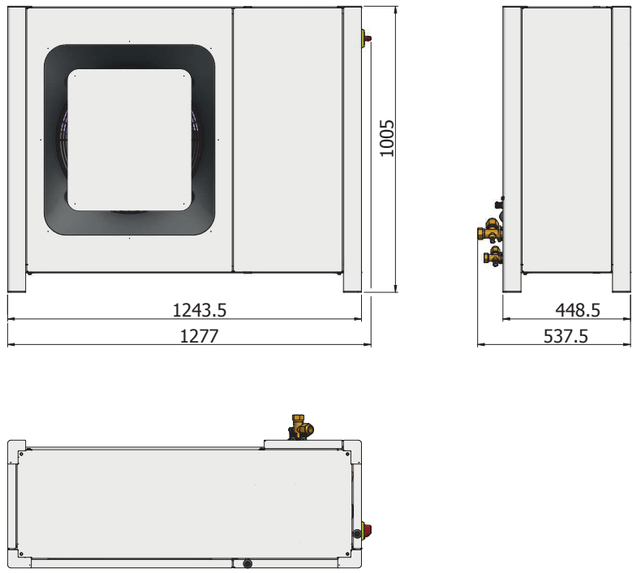




## MODEL HOUSING 2

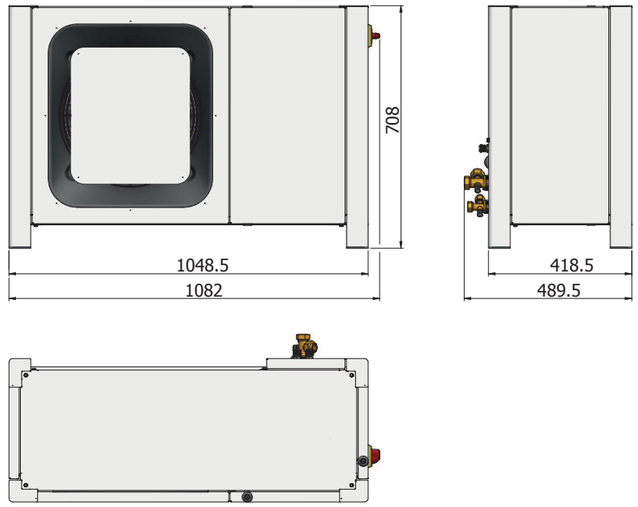


# STACKABILITY OPTIONS

## DIFFERENT HOUSING SIZES

Different housing sizes with complementary bracket

| CONFIGURATIONS | ACCESSORY CODE |
|---|---|
| Housing 1 to Housing 2 | 1996761 |
| Housing 1 to Housing 3 | 1996762 |
| Housing 2 to Housing 3 | |

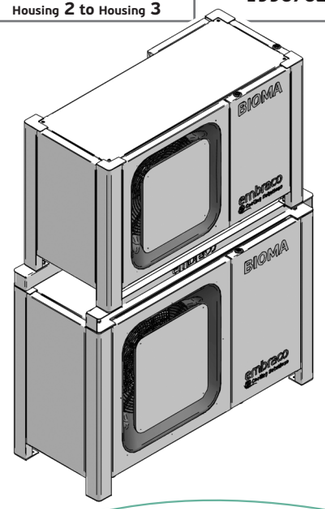


## SAME HOUSING SIZES

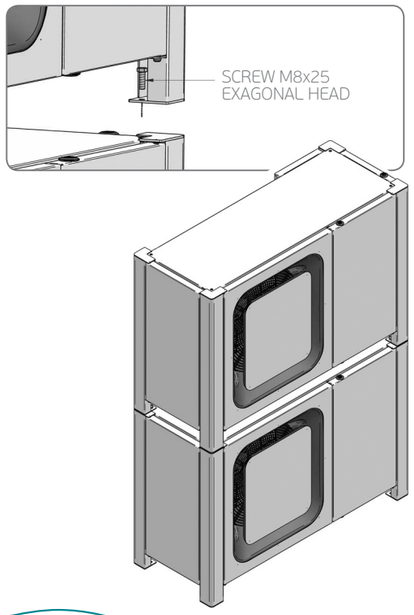

# WIRING DIAGRAMS

## Hermetic reciprocating compressors - 230W 1~ 50v

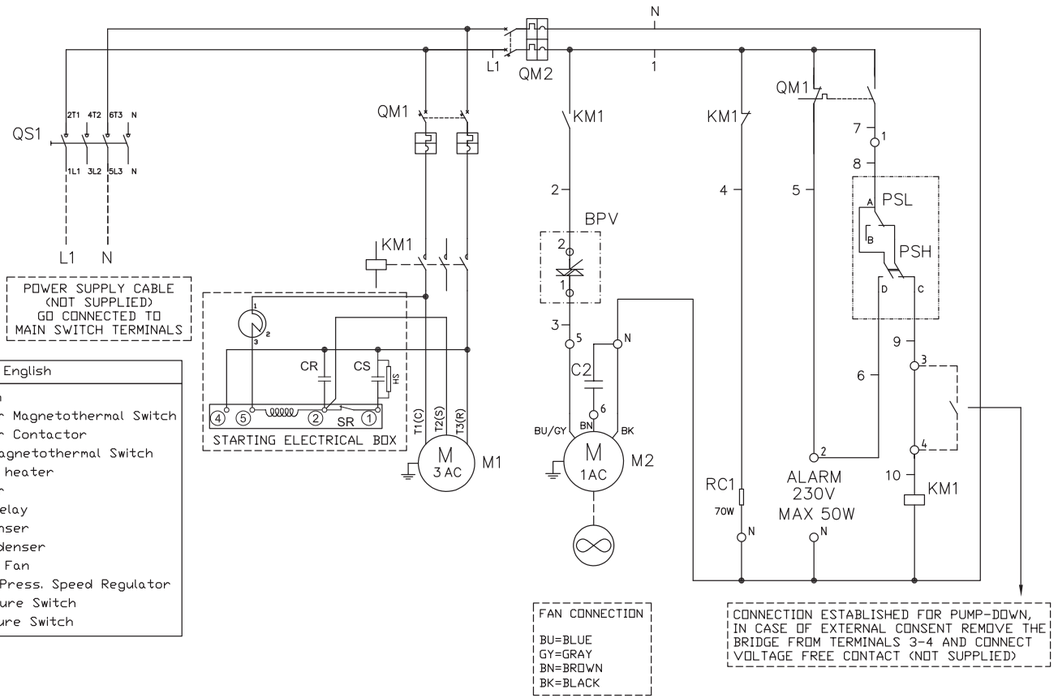


| | English |
|---|---|
| QS1 | Main Switch |
| QM1 | Compressor Magnetothermal Switch |
| KM1 | Compressor Contactor |
| QM2 | Auxiliary Magnetothermal Switch |
| RC1 | Crankcase heater |
| M1 | Compressor |
| SR | Starting Relay |
| CR | Run Condenser |
| CS | Start Condenser |
| M2 | Condenser Fan |
| BPV | Cond. Fan Press. Speed Regulator |
| PSH | High Pressure Switch |
| PSL | Low Pressure Switch |





## Hermetic reciprocating compressors - 400W 3~ 50v

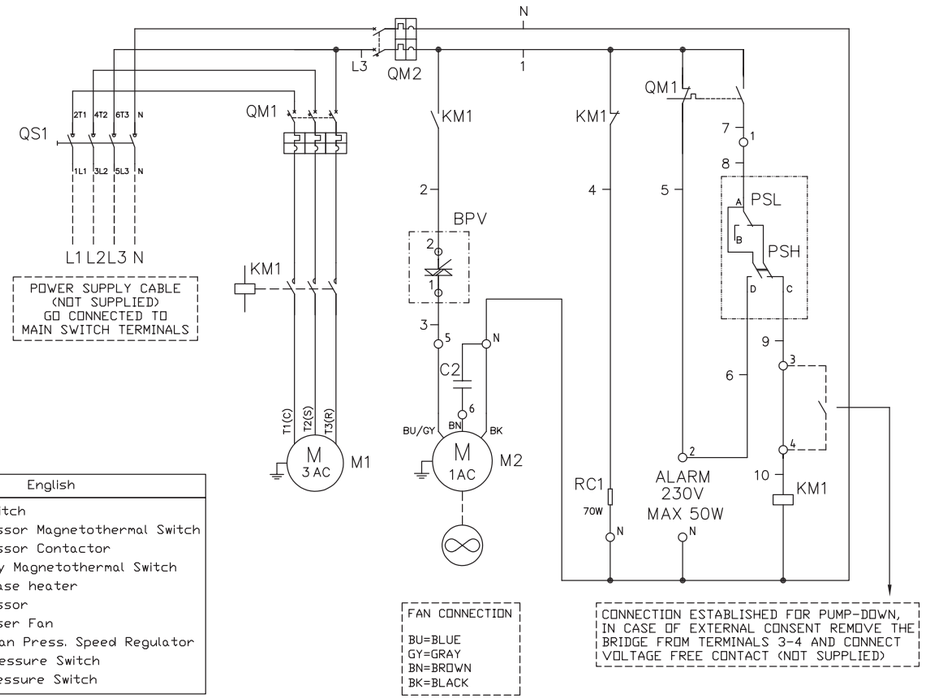


| | English |
|---|---|
| QS1 | Main Switch |
| QM1 | Compressor Magnetothermal Switch |
| KM1 | Compressor Contactor |
| QM2 | Auxiliary Magnetothermal Switch |
| RC1 | Crankcase heater |
| M1 | Compressor |
| M2 | Condenser Fan |
| BPV | Cond. Fan Press. Speed Regulator |
| PSH | High Pressure Switch |
| PSL | Low Pressure Switch |

# WIRING DIAGRAMS

## Scroll compressors - 220W 1~ 50v

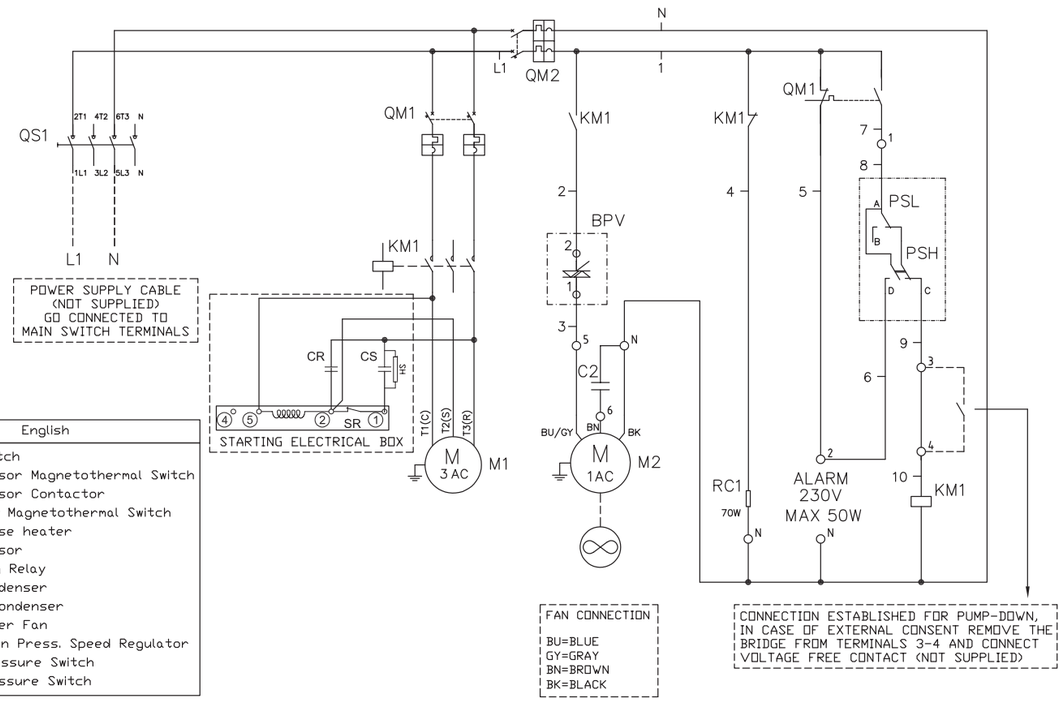


| | English |
|---|---|
| QS1 | Main Switch |
| QM1 | Compressor Magnetothermal Switch |
| KM1 | Compressor Contactor |
| QM2 | Auxiliary Magnetothermal Switch |
| RC1 | Crankcase heater |
| M1 | Compressor |
| SR | Starting Relay |
| CR | Run Condenser |
| CS | Start Condenser |
| M2 | Condenser Fan |
| BPV | Cond. Fan Press. Speed Regulator |
| PSH | High Pressure Switch |
| PSL | Low Pressure Switch |





## Scroll compressors - 400W 3~ 50v

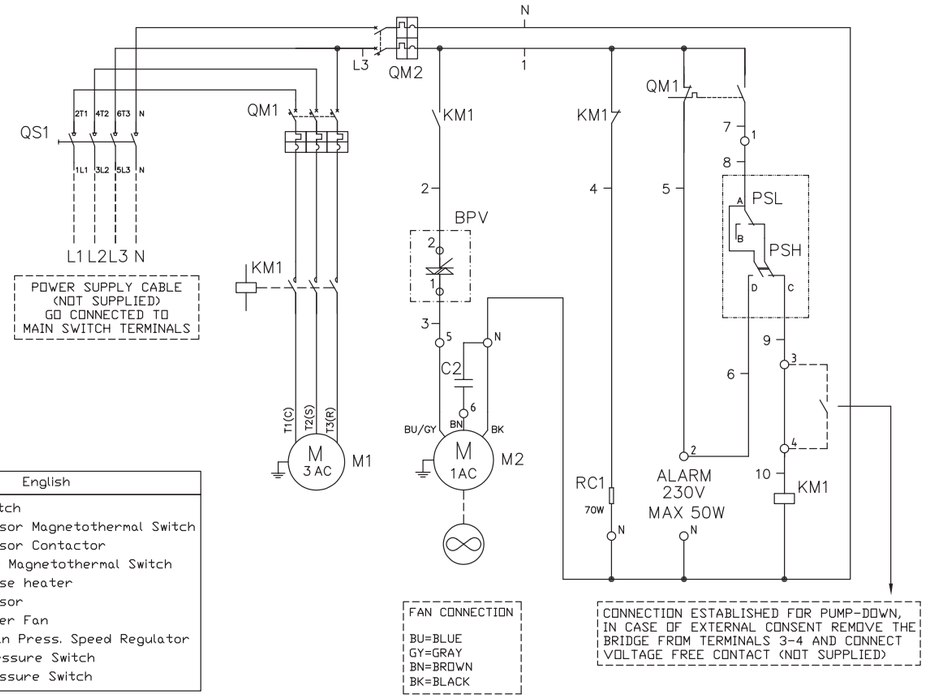


| | English |
|---|---|
| QS1 | Main Switch |
| QM1 | Compressor Magnetothermal Switch |
| KM1 | Compressor Contactor |
| QM2 | Auxiliary Magnetothermal Switch |
| RC1 | Crankcase heater |
| M1 | Compressor |
| M2 | Condenser Fan |
| BPV | Cond. Fan Press. Speed Regulator |
| PSH | High Pressure Switch |
| PSL | Low Pressure Switch |

## FIND DIGITAL CATALOGUE, CROSS REFERENCE, SELECTION SOFTWARE, TECHNICAL RESOURCES AND MUCH MORE IN OUR:

## NEW PRODUCT SELECTOR

PRODUCT SELECTOR
embraco

http://products.embraco.com



# DIGITAL TOOLS

## DOWNLOAD THE APP

embraco toolbox

## ... AVAILABLE IN 14 LANGUAGES!

- CROSS-REFERENCE
- PRODUCT CATALOGUE
- DISTRIBUTOR LOCATOR
- UNIT CONVERTER
- REFRIGERANT SLIDER
- REFRIGERATION CLUB
- TROUBLESHOOTING

Download on the App Store

GET IT ON Google Play

## AND BECOME PART OF OUR REFRIGERATION CLUB!

REFRIGERATION CLUB embraco

REFRIGERATION CLUB
embraco

www.embraco.com

# GLOBAL PRESENCE

embraco

PRODUCT SELECTOR

REFRIGERATION CLUB

Subject to alteration without previous notice - Code CBE001EN - Date: May 2019 - Version 01